EV A / B / C

ELECTRONIC HANDWHEEL

MAIN FEATURES

Electronic handwheel series designed for positioning on CNC machines with manual drive.

- Resolution up to 10000 ppr with zero signal
- Several electronic output configurations available
- Up to 28 V DC power supply
- Output frequency up to 100 kHz
- Cable or connector output
- Several flanges available

ORDERING CODE

EV A M 100 Z 5 L 10 M R . XXX

SERIES
electronic handwheel EV

TYPE
square flange □ 90 mm A
fixing flange ø 11 mm B
fixing flange ø 28 mm C

KNOB
with knob M
without knob S

RESOLUTION
(EV A / B) ppr from 1 to 10000
(EV C) ppr 100
N.B.: please directly contact our offices for pulses availability

ZERO PULSE
without zero pulse S
with zero pulse Z

POWER SUPPLY
(available only with L electronic output) 5 V DC 5
(available only with L or PC electronic output) 8 ... 24 V DC 8/24
5 ... 28 V DC 5/28

OUTPUT TYPE
N NPN
C NPN open collector
P push-pull
PC protected push-pull (AEIC-7272)
L line driver

SHAFT DIAMETER
6 mm (EV C)
10 mm (EV A / B)

OUTPUT TYPE
P cable output (standard length 1.5 m) (EV A / B)
cable output (standard length 0.3 m) (EV C)
M M connector output M
J J connectore output

OUTPUT DIRECTION
A axial (EV A / B)
R radial

VARIANT
XXX custom version

NUANCE®

121221
©Copyright 2013 Eltra S.p.a. Unipersonale. All rights reserved. All informations in this catalogare subject to change without notice.
Eltra takes no responsibility for typographic errors. For the terms of sales please check the website www.eltra.it.

EV A

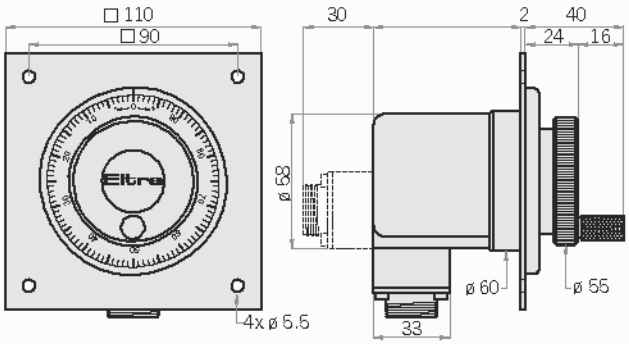

EV B

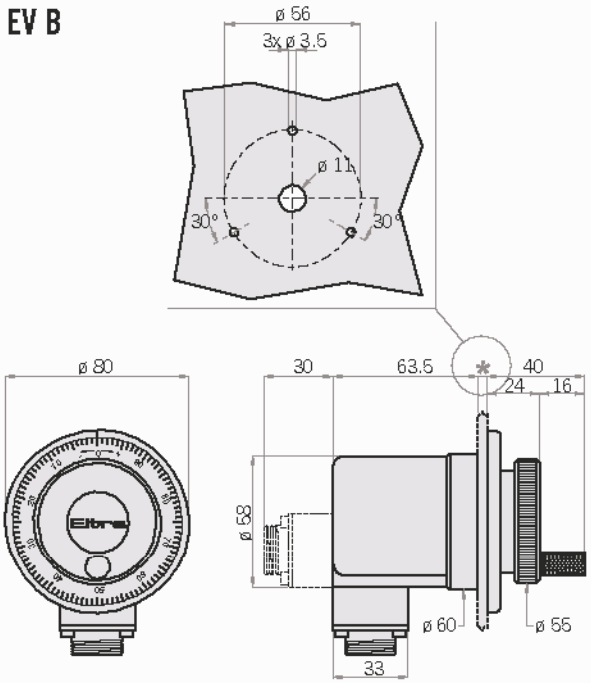

EV C

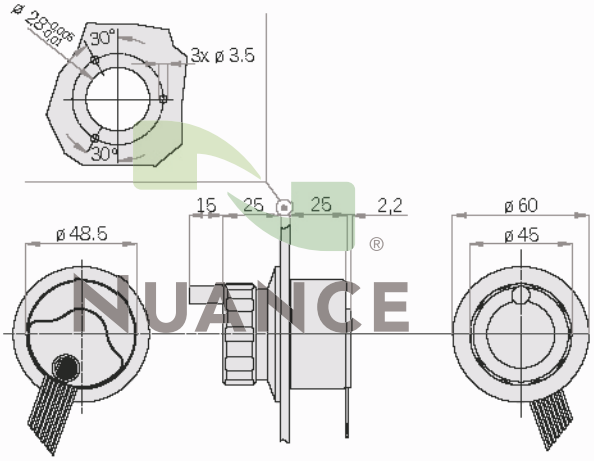

Electrical specifications

Resolution	from 1 to 10000 ppr (EV A / B) 100 ppr (EV C)
Power supply	5 V DC ± 10% 5 ... 28 V DC ± 5% 8 ... 24 V DC ± 5% (reverse polarity protection)
Current consumption without load	100 mA max
Max load current	50 mA for channel 20 mA for channel (line driver)
Output type	NPN / NPN open collector / push-pull / line driver
Max output frequency	100 kHz
Counting direction	A leads B clockwise (shaft view)
Electromagnetic compatibility	IEC 61000-6-2 IEC 61000-6-4

Mechanical specifications

Shaft diameter	ø 6 mm (EV C) ø 10 mm (EV A / B)
Enclosure rating	IP 64 (EV A / B) (IEC 60529) IP 40 (EV C) (IEC 60529)
Mechanical indexes per turn	100
Shock	50 G, 11 ms (IEC 60068-2-27)
Vibration	10 G, 10 ... 2000 Hz (IEC 60068-2-6)
Shaft material	1.4305 / AISI 303 stainless steel
Body material	EN-AW 2011 aluminum
Housing material	PA 66 glass fiber reinforced (EV A / B) stainless steel (EV C)
Bearings	2 ball bearings
Bearings life	10^9 revolutions
Operating temperature	-10° ... +60°C
Storage temperature	-25° ... +70°C
Weight	150 g (EV C) 450 g (EV A / B)

Example of EV C application

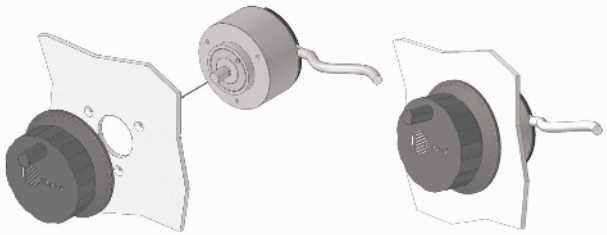

Connections and standard colours

Function	Push pull / Npn / Npn open collector	Line driver
+V DC	red	red
0 V	black	black
Ch. A	green	green
Ch. A-	/	brown
Ch. B	yellow	yellow
Ch. B-	/	orange
Ch. Z	blue	blue
Ch. Z-	/	white
⏚	shield	shield

NUANCE®

FE

ROPE ENCODER
FOR LINEAR MEASURES

MAIN FEATURES

Rope encoder series available for lengths up to 4 m.
The applied encoder could be incremental or absolute (both available with SSI or PROFIBUS® interface).
Perfectly suitable also for harsh enviroments, thanks to its high mechanical strength.
It can be used in wide range of applications such as: vertical storehouses, presses, extruders, etc.

ORDERING CODE

FE 1500 A . XXX

SERIES
rope encoder for linear measures FE

WORKING STROKE
1,5 m 1500
4 m 4000

TYPE OF ROPE END
A rope eyelet

VARIANT
XXX custom variant

The encoder you wish to apply to the FE model needs to be ordered separately. The F letter will be placed before the standard ordering code.

Example:
1) encoder model EH 30 M ordering code: FEH30M300S8/24P6X6PR
2) encoder model EL 53 B ordering code: FEL53B1100S5/28P6X3MR
3) encoder model EAM 53 B ordering code: FEAM53B16/4096G8/28PPX6X3MER

Complete ordering code example:
FE1500A-FEH30M300S8/24P6X6PR

NUANCE®

130506
©Copyright 2013 Eltra S.p.a. Unipersonale. All rights reserved. All informations in this catalog are subject to change without notice.
Eltra takes no responsibility for typographic errors. For the terms of sales please check the website www.eltra.it.

FE 1500

* EH30M encoder application

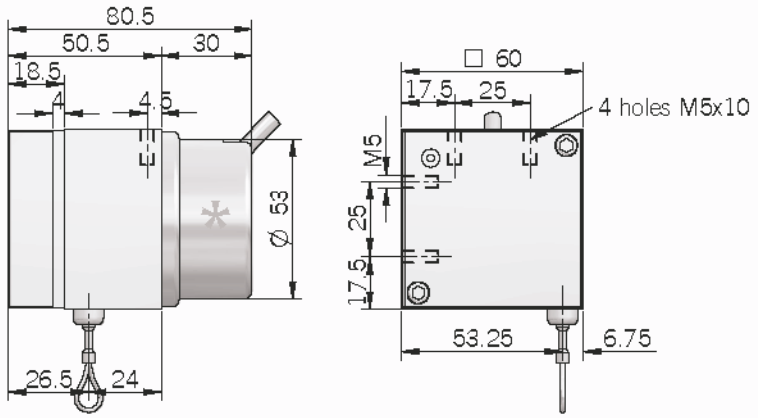

FE 4000

* EH30M encoder application

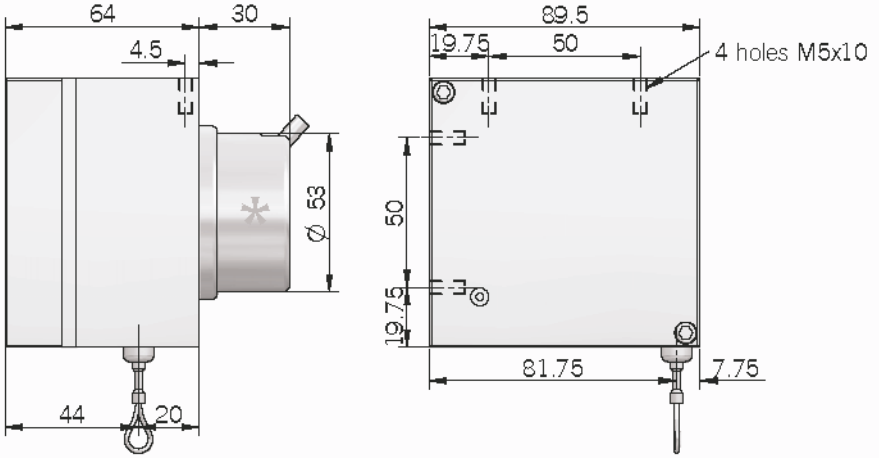

FEL 53 B

incremental encoder application

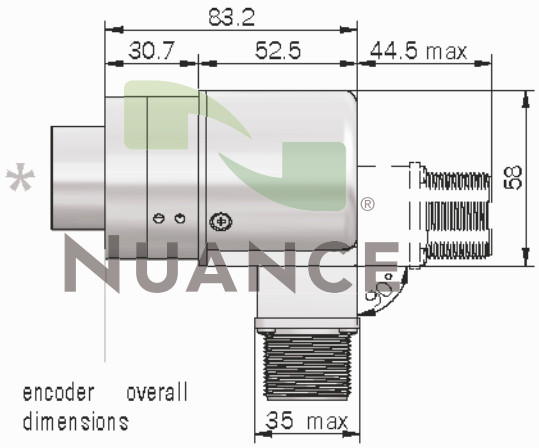

encoder overall dimensions

FEAM 53 B

multiturn absolute encoder application

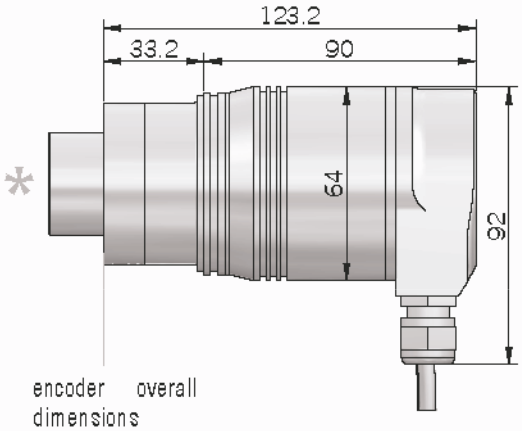

encoder overall dimensions

NUANCE®

General specifications

Model	FE 1500	FE 4000
Coil extent (1 turn)	120	220

Incremental encoder application

Resolution	Pulses	Pulses
1 mm	120	220
0,4 mm	300	550
0,1 mm	1200	2200

For specific resolutions please contact our offices

Multiturn absolute encoder application

Resolution	Pulses	Pulses
1 mm	120	220
0,4 mm	300	550
0,1 mm	1200	2200

In case of splitted resolutions, output code will be independent of resolution and turn number

	Turns	Turns
	12,5	18

For specific resolutions please contact our offices

Mechanical specifications

Linearity error	± 0,05 % f.s.
Max movement speed	0,85 m/s
Enclosure rating	IP 54 (IEC 60529) For encoder IP rating see related datasheet
Shock	50 G, 11 ms (IEC 60068-2-27)
Vibration	10 G, 10 ... 2000 Hz (IEC 60068-2-6)
Housing material	painted aluminum
Rope material	Dyneema®
Operating temperature	0° ... +60 °C
Storage temperature	-25° ... +70 °C
Weight	500 g (FE 1500) 1100 g (FE 4000)

For encoder specifications, refer to technical sheets of the following models:

- for EH 30 M see EH 38 encoder
- for EL 53 B see EL 53 encoder
- for EAM 53 B see EAM 58 encoder

NUANCE®

120503
© Copyright 2013 Eltra S.p.a. Unipersonale. All rights reserved. All informations in this catalog are subject to change without notice.
Eltra takes no responsibility for typographic errors. For the terms of sales please check the website www.eltra.it.

FES

ROPE ENCODER
FOR LINEAR MEASURES

MAIN FEATURES

Rope encoder series available for lengths up to 13,5 m. The attached encoder can be incremental or absolute (also with SSI or PROFIBUS®).
Perfectly suitable also for harsh environments, thanks to its excellent mechanical strength.
It can be used in wide range of applications such as: vertical warehouses, presses, extruders, etc.

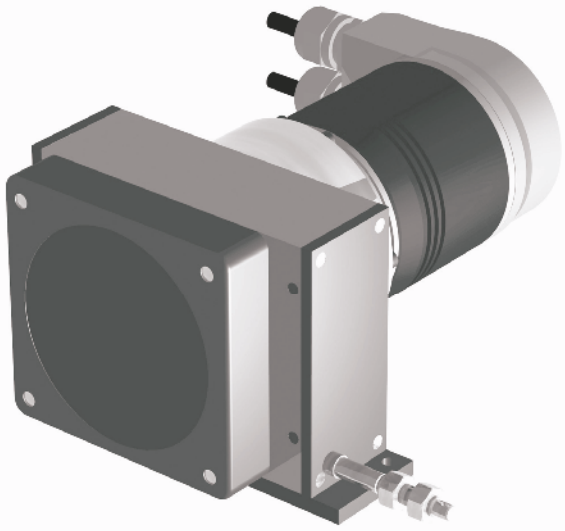

ORDERING CODE

FES 3000 A . XXX

SERIES
rope encoder for linear measures FES

WORKING STROKE
3 m 3000
6 m 6000
13,5 m 13500

OUTPUT TYPE
A horizontal output

VARIANT
XXX custom version

The order code above refers only to cable pull. Encoder must be ordered separately : available models are EL 58 B, EAM 58 B

Complete ordering code example:
FES6000A-EL58B...

FES 3000

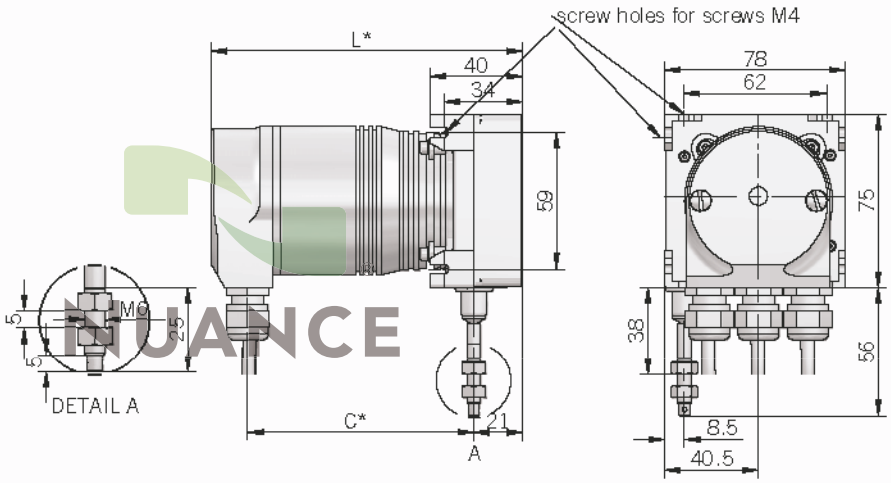

NUANCE

FES 6000

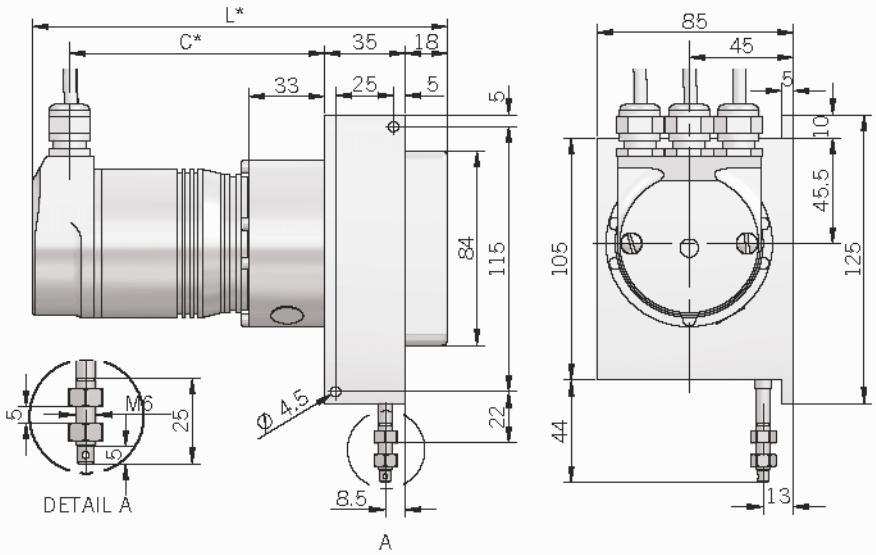

Mounting note

When you attach the wire, it should be pulled out straight in line with the wire outlet.

Recommendation: A 5 mm wire extension is recommended before the measurement starting point. This prevents the wire snapping back to the stop on rewinding.

FES 13500

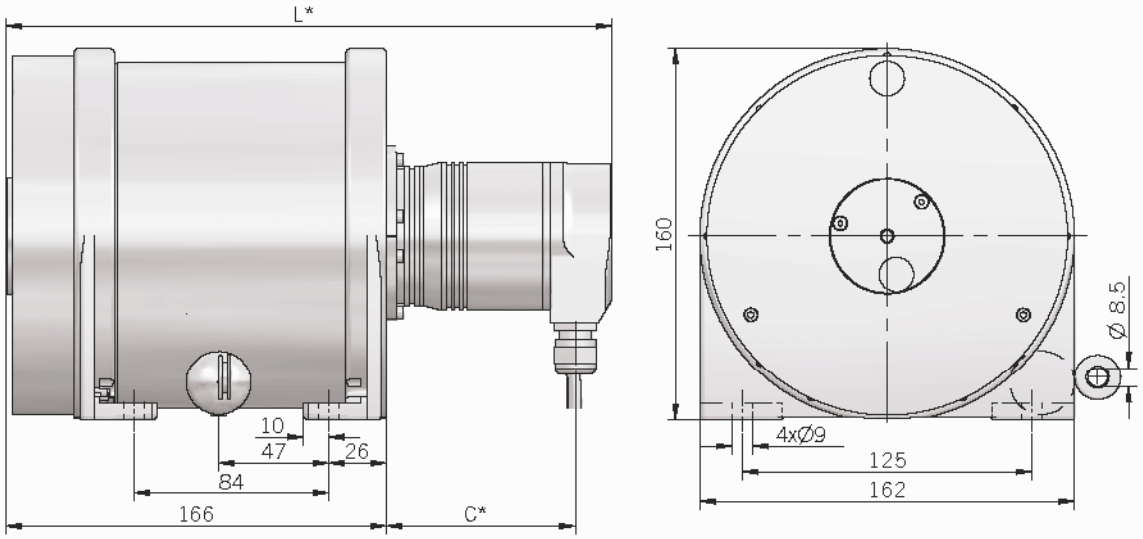

Mechanical specifications

Model	FES 3000	FES 6000	FES 13500
Max length measurement	3 m	6 m	13,5 m
Drum circumference	200 mm	200 mm	400 mm
Wire diameter	0,87 mm	0,54 mm	1 mm
Repeat accuracy		± 0.15mm	
Max speed	0,8 m/s	3 m/s	4 m/s
Pull-out force required	≥ 3N	≥ 8N	≥ 25N
Housing material		aluminum / plastic	
Rope material		steel	
Enclosure rating		depends on encoder IP	
Operating temperature	-40° ... +80°C	-20° ... +80°C	-20° ... +80°C
Weight	350 g + encoder	700 g + encoder	4400 g + encoder
(EL 58 B) L*	95 mm	140 mm	223 mm
(EAM 58 B) L*	109 mm	154 mm	237 mm
(EAM 58 B PROFIBUS) L*	135 mm	180 mm	263 mm
(EL 58 B) C*	58 mm	70 mm	42 mm
(EAM 58 B) C*	70 mm	82 mm	54 mm
(EAM 58 B PROFIBUS) C*	98 mm	110 mm	82 mm

NUANCE ®

©Copyright 2013 Eltra S.p.a. Unipersonale. All rights reserved. All informations in this catalogare subject to change without notice.
Eltra takes no responsibility for typographic errors. For the terms of sales please check the website www.eltra.it.

THE EMB BOARD

This board is used when it is necessary to adjust encoder electronic features to control ones.
Main functions of EMB are output signal splitting and adaptation of output stages.
For instance, it happens to have an encoder with 5 V DC output and a control that accepts only 24 V DC data. It may also happen to use an encoder connected with a control with the same power supply, but different electronics.
It can solve a wide range of problems: check the ordering code in the next page to find further informations.
On the board there can be up to 2 different voltages and it must be supplied through the X4 connector with the higher voltage used. Moreover it is possible to obtain up to 8 outputs from the same input by assembling several boards in a single support in order to reduce drastically wiring.
In this case the ordering code will contain information about all outputs. For example, a board with one 5 V DC NPN input and eight 5 V DC line driver outputs has the following ordering code: **EMB5N5L5L5L5L5L5L5L.**
The following example may explain better a typical EMB application:
an encoder with 5 V DC line driver output has to be connected to a 24 V DC push-pull input and also to an instrument having 5 V DC line driver input. The board you have to order will have the following code:
EMB5L8/24P5L where EMB**5L** indicates 5 V DC line driver input on X1 connector, EMB5L**8/24P** indicates 24 V DC push-pull output on X2 connector, and the last EMB5L8/24P**5L** indicates 5 V DC line driver output on X3 connector.
Power supply of this board is 24 V DC, because it is the highest used value, and it will be supplied through X4 connector.

ORDERING CODE

	in		out1		out2 (optional output)			
EMB	5	L	8/24	P	8/24	P	.	XXX

SERIES
signal splitter EMB

INPUT VOLTAGE X1 CONNECTOR
5 V DC 5
8 ... 24 V DC 8/24

INPUT ELECTRONICS X1 CONNECTOR
NPN N
NPN open collector C
push-pull P
line driver L
PNP R

OUTPUT VOLTAGE (OUT1) X2 CONNECTOR
5 V DC 5
8 ... 24 V DC 8/24

OUTPUT ELECTRONICS (OUT1) X2 CONNECTOR
N NPN
C NPN open collector
P push-pull
L line driver

OUTPUT VOLTAGE (OUT2) X3 CONNECTOR
5 5 V DC
8/24 8 ... 24 V DC

OUTPUT ELECTRONICS (OUT2) X3 CONNECTOR
N NPN
C NPN open collector
P push-pull
L line driver

VARIANT
XXX custom version

NUANCE®

Operating diagram and terminal board connections

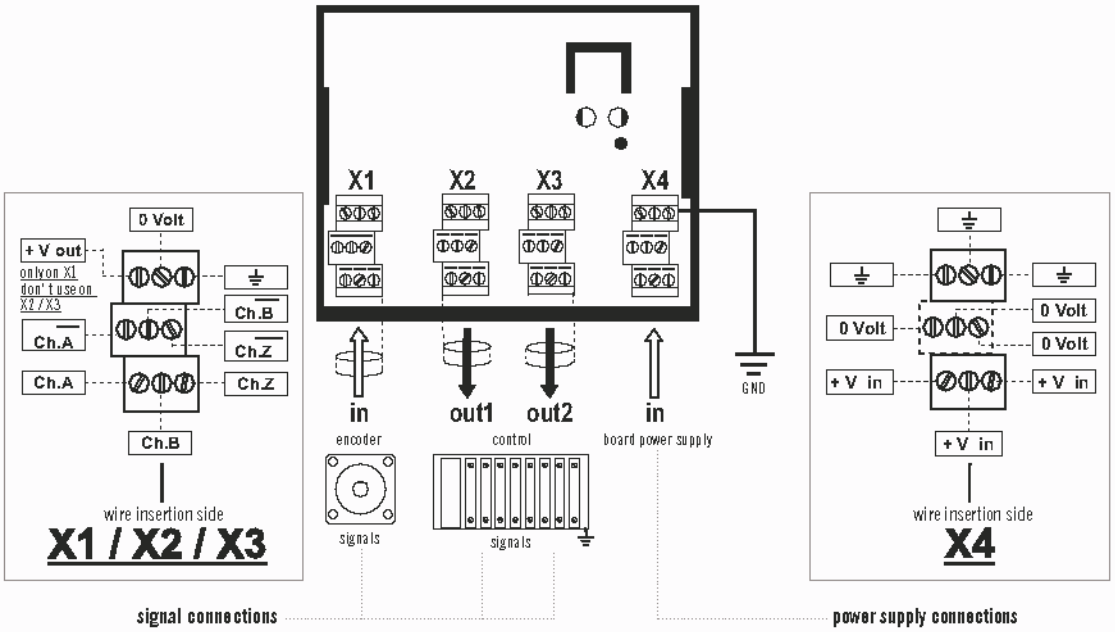

Examples

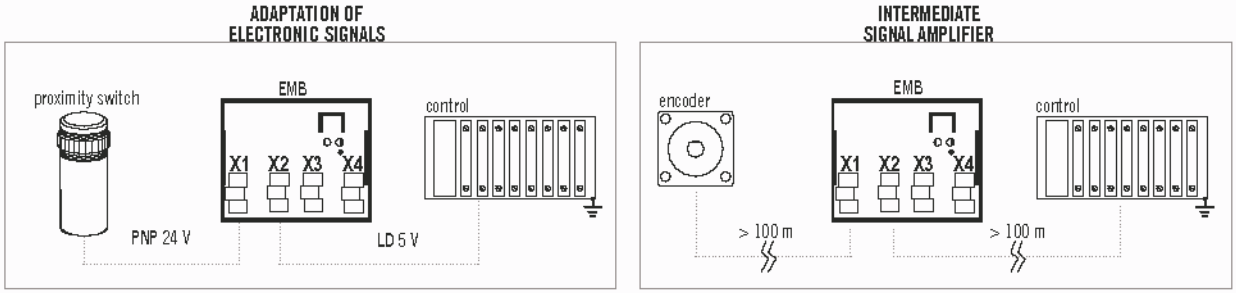

Electrical specifications

INPUT and OUTPUT voltages	5 V DC ±10% 8 ... 24 VDC ±5%
Current consumption without load	70 mA max
Max load current	20 mA for channel (line driver) 40 mA for channel (push-pull)
Max input current	10 mA for channel
Max operating frequency	100 kHz
Current consumption in maximum operating conditions (A)	$Imax = \frac{0,12*(VX1+VX2+...VXn+VX4)}{VX4}$ where: VX1 = input voltage on X1 VX2, ...VXn = output voltage on X2, ...Xn VX4 = board power supply
Operating temperature	0° ... +50°C
Storage temperature	-10° ... +60°C
Fixing on panel	DIN 46277-3 rail (Omega) DIN 46277-2 rail (Omega)

Mechanical dimensions

Single implementation

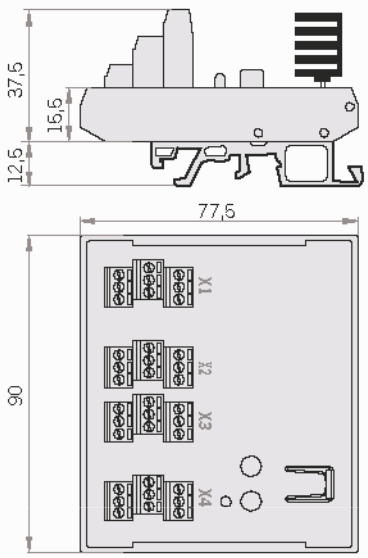

Multiple implementation
(4 modules / 8 outputs max)

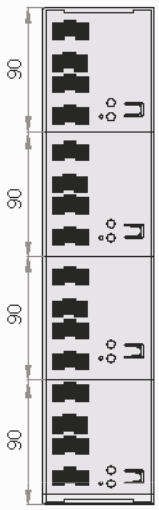

130320
© Copyright 2013 Eltra S.p.a. Unipersonale. All rights reserved. All informations in this catalog are subject to change without notice.
Eltra takes no responsibility for typographic errors. For the terms of sales please check the website www.eltra.it.

THE EMD BOARD

This board is used when it is necessary to select a signal among a maximum of 3 inputs.
The EMD board accepts input signals coming from a maximum of 3 encoders and provides as output the signals of one of these encoders.
Output signals are selected connecting properly the two inputs, in1 and in2, according to the operating diagram (see next page).
EMD and encoder electronics must be indicated in the ordering code and the electronic interfaces of the connected encoders must be all identical. Moreover the EMD provides 3 contacts normally open that close when respective input is selected.
The following example is needful to understand better the use of this board.
We would like to read the signals of 3 encoders (or other devices with similar features) in sequential way. Encoders must have same output electronics, for example 5 V DC line driver. The instrument for data acquisition, on the contrary, has a different electronic interface, for example 24 V DC push-pull.
In this case the EMD board will perfom the selection function among the connected encoders and the matching of the electronic interfaces.
The ordering code will be:
EMD5L8/24P, where EMD**5L** indicates that inputs are 5 V DC line driver, EMD5L**8/24P** indicates that output is 8÷24 V DC push-pull. EMD power supply must be the highest value among requested voltages: in this case 8÷24 V DC. The encoder selection is carried out through a logic type signal at in1 and in2 inputs on the terminal board.
Logic level "1" is obtained connecting a voltage included between 5 and 24 V DC to above mentioned inputs.
Logic level "0", instead, is correctly interpreted if voltage is included between 0 and 3 V DC. The combination of logic levels at in1 and in2 inputs sets outputs to 4 different states, as described in the table in the following page.

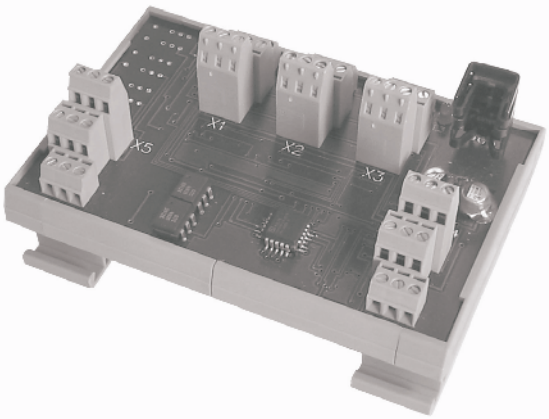

ORDERING CODE

		in		out				
EMD	5		L	8/24	P	.	XXX

SERIES
signal selector EMD

INPUT VOLTAGE X1 / X2 / X3 CONNECTOR
5 V DC 5
8 ... 24 V DC 8/24

INPUT ELECTRONICS X1 / X2 / X3 CONNECTOR
NPN N
PNP R
push-pull P
line driver L

OUTPUT ELECTRONICS X4 CONNECTOR
N NPN
P push-pull
L line driver

OUTPUT VOLTAGE X4 CONNECTOR
5 5 V DC
8/24 8 ... 24 V DC

VARIANT
XXX custom version

NUANCE

Operating diagram and terminal board connections

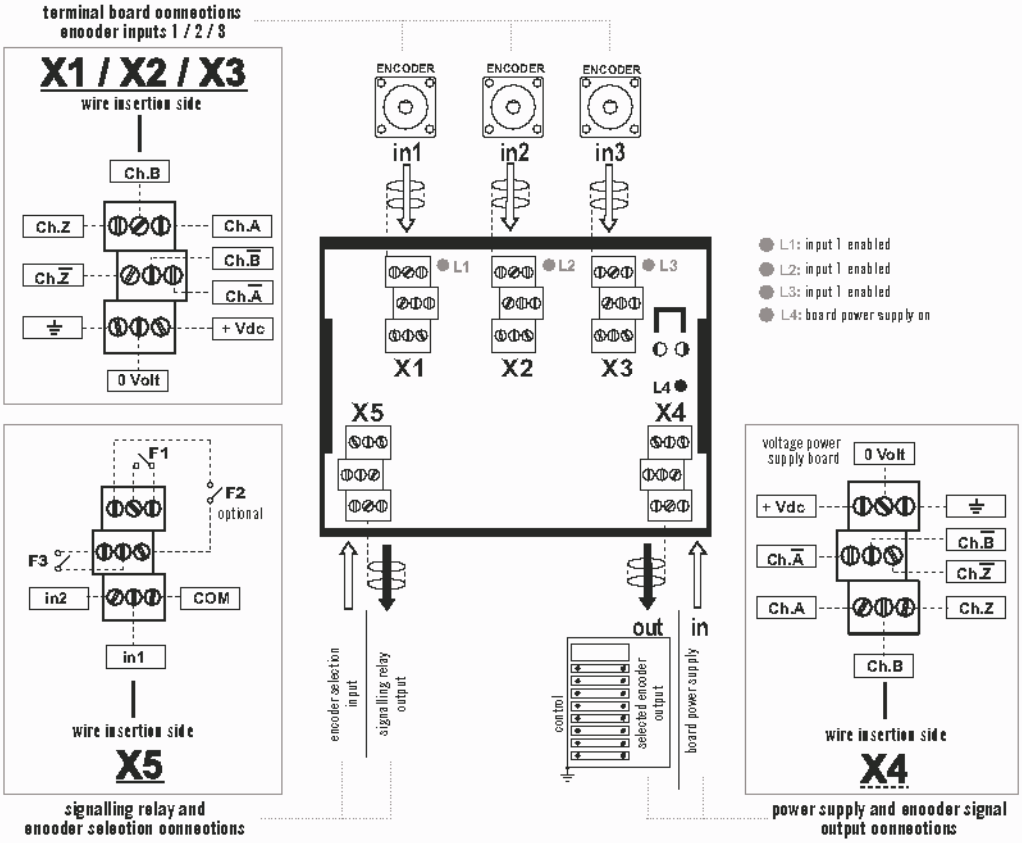

Logic states

The table indicates the output state on X4 connector and on X5 contacts, according to logic states present on in1 and in2 on X5 connector.

Logic state on X5		Selected encoder on X4			Selected contact on X5		
in1	in2	X1	X2	X3	F1	F2	F3
0	0	-	-	-	-	-	-
1	0	•	-	-	•	-	-
0	1	-	•	-	-	•	-
1	1	-	-	•	-	-	•

Electrical specifications

Power supply	5 V DC ±10% 8 ... 24 VDC ±5%
Current consumption without load	150 mA max
Max load current	20 mA for channel (line driver) 40 mA for channel (push-pull)
Max input current	10 mA for channel
Operating frequency	100 kHz max
Input logic levels in1 and in2	"1" = 5 ... 24 V DC "0" = 0 ... 3 V DC
Contact characteristics	Vmax = 125 V AC / 60 V DC Imax = 0,5 A Vmin = 5 V DC Imin = 1 mA
Operating temperature	0° ... +40°C
Storage temperature	-10° ... +60°C
Fixing on panel	DIN 46277-3 rail (Omega) DIN 46277-2 rail (Omega)

NUANCE ®

Mechanical dimensions

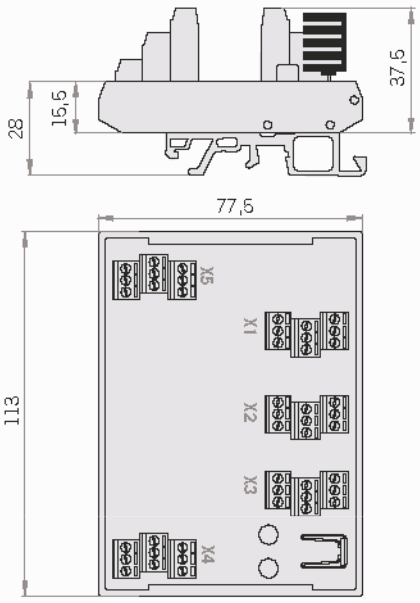

©Copyright 2013 Eltra S.p.a. Unipersonale. All rights reserved. All informations in this catalog are subject to change without notice.
Eltra takes no responsibility for typographic errors. For the terms of sales please check the website www.eltra.it.

PRECISION ELASTIC COUPLINGS

ISO 9001:2000

ELASTIC COUPLING

Eltra accurate elastic couplings are essential parts for the transmission of rotatory motion to the encoder shaft.
Couplings are aluminium alloy made and are composed by a cylindrical body on which there is a helical groove that determines:
- torsional rigidity
- ability to compensate for slight shaft misalignments
- ability to absorb small axial shifts of the shaft.

Eltra elastic couplings have also a perfect balancing of the rotating body. They don't have critical points subject to breaking and they are completely frictionless. Moreover they perfectly transmit the rotatory motion, even in case of axial misalignment. Our couplings do not require any type of maintenance.
The internal drain allows the coupling between the shafts with distances from a minimum of 0.5 mm to a maximum of 6.12 mm (see the measure "F").

Elastic coupling can be supplied with different coupling diameters. E.G.: d1 = 8 mm, d2 = 10 mm. In this case the ordering code should be: G25A8/10.

ORDERING CODE

G 25 A 6 / 8

SERIES
precision elastic coupling G

COUPLING SIZE
(see table) 20
(see table) 25
(see table) 30

SHAFT FIXING TYPE
shaft fixing with grub screw A

HOLE DIAMETER "d1"
ø 6 mm 6
ø 8 mm 8
ø 9.52 (3/8") mm 9
ø 10 mm 10

HOLE DIAMETER "d2"
ø 6 mm 6
ø 8 mm 8
ø 9.52 (3/8") mm 9
ø 10 mm 10
not indicate if d1=d2

Standard coupling

Type of material:
aluminium

For holes (d1-d2) different contact our offices directly.

Standard couplings P/N	De	L		d1 = d2		A	B	M	E	F	Torque
G20A6	ø 20	20	$^{+0.1}_{-0.1}$	ø 6H7	$^{+0.012}_{0}$	6	8	M3	7	6	0.25 Nm
G25A8	ø 25	25	$^{+0.1}_{-0.1}$	ø 8H7	$^{+0.015}_{0}$	7	11	M4	8	9	0.4 Nm
G25A9	ø 25	25	$^{+0.1}_{-0.1}$	ø 9.52H7	$^{+0.015}_{0}$	7	11	M4	8	9	0.4 Nm
G25A10	ø 25	25	$^{+0.1}_{-0.1}$	ø 10H7	$^{+0.015}_{0}$	7	11	M4	8	9	0.4 Nm
G30A10	ø 25	30	$^{+0.1}_{-0.1}$	ø 10H7	$^{+0.015}_{0}$	8	14	M4	9	12	0.4 Nm

For proper installation it is recommended to insert shafts in the coupling observing "E" dimensions.

MECHANICAL DIMENSIONS

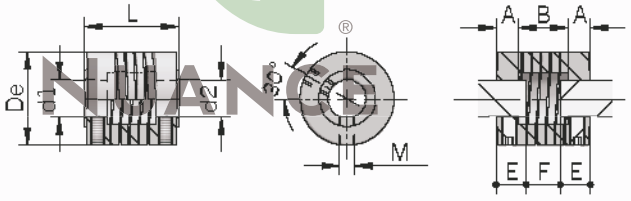

NANO

Special coupling

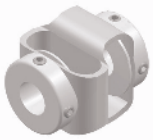

Ordering code	De	L		d1 = d2		A	B	M	E	F	Torque
GS 02A 6	ø 19.1	22	$^{+0.1}_{-0.1}$	ø 6H7	$^{+0.012}_{0}$			M3	6.3		0.9 Nm
GS 10A 8	ø 19.1	22	$^{+0.1}_{-0.1}$	ø 8H7	$^{+0.012}_{0}$			M3	6.3		0.9 Nm
GS 16A 10	ø 19.1	22	$^{+0.1}_{-0.1}$	ø 10H7	$^{+0.012}_{0}$			M3	6.3		0.9 Nm
GS 32A 6	ø 27	27	$^{+0.1}_{-0.1}$	ø 6H7	$^{+0.012}_{0}$			M3	8		0.94 Nm
GS 01A 8	ø 27	27	$^{+0.1}_{-0.1}$	ø 8H7	$^{+0.012}_{0}$			M3	8		0.94 Nm
GS 11A 10	ø 27	27	$^{+0.1}_{-0.1}$	ø 10H7	$^{+0.012}_{0}$			M3	8		0.94 Nm
GS 15A 10	ø 48	48	$^{+0.1}_{-0.1}$	ø 10H7	$^{+0.012}_{0}$			M4	12.6		2.27 Nm
GS 23A 12	ø 48	48	$^{+0.1}_{-0.1}$	ø 12H7	$^{+0.012}_{0}$			M4	12.6		2.27 Nm
GS 29A 6	ø 25	32	$^{+0.1}_{-0.1}$	ø 6H7	$^{+0.012}_{0}$			M3	10		3 Nm
GS 24A 8	ø 25	32	$^{+0.1}_{-0.1}$	ø 8H7	$^{+0.012}_{0}$			M3	10		3 Nm
GS 25A 10	ø 25	32	$^{+0.1}_{-0.1}$	ø 10H7	$^{+0.012}_{0}$			M3	10		3 Nm
GS 37A 10	ø 26	46	$^{+0.1}_{-0.1}$	ø 10H7	$^{+0.012}_{0}$			M4	10		3 Nm

For proper installation it is recommended to insert shafts in the coupling observing "E" dimensions.
Eltra also manufactures a special coupling series designed specifically for critical and heavy uses. Some special couplings available on stock are listed in the table above.
Different couplings are available on demand.

GS 02A 6 - GS 10A 8 - GS 16A 10

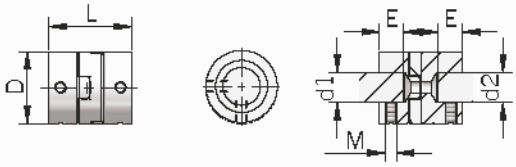

GS 01A 8 - GS 11A 10 - GS 15A 10 - GS 23A 12

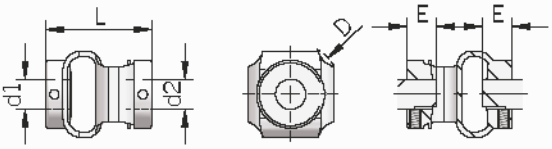

GS 29A 6 - GS 24A 8 - GS 25A 10

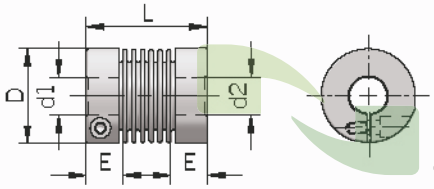

NUANCE®

GS 37A 10

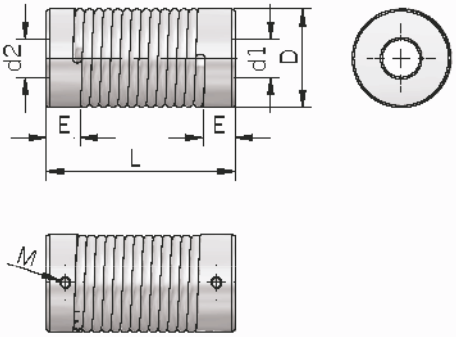

130417
© Copyright 2013 Eltra S.p.a. Unipersonale. All rights reserved. All informations in this catalog are subject to change without notice.
Eltra takes no responsibility for typographic errors. For the terms of sales please check the website www.eltra.it.

ABSOLUTE ENCODER

GENERAL DESCRIPTION

WORKING PRINCIPLE

The working principle of an absolute encoder is very similar to incremental one: a rotating disk, with transparent and opaque windows, interrupts a light beam acquired by photo receivers. Consequently, light pulses are converted into electric ones and then they are processed and transmitted by the output electronic.

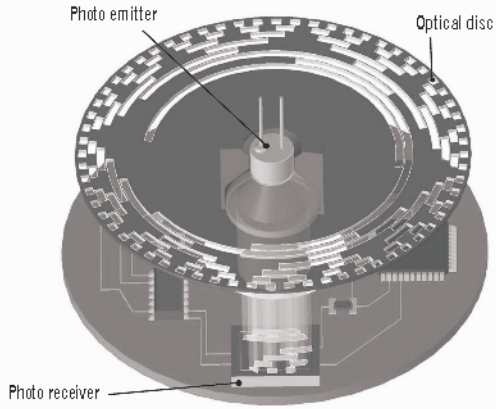

ABSOLUTE CODING

The main difference between incremental and absolute is how the position is given: on incremental the position is given from the zero index while the absolute bases its position on the output code, which is unique for each position inside the revolution. Consequently, an absolute encoder never looses the real position neither if the power goes out nor in case of shaft movement.
Nonetheless, with an absolute encoder as soon as the power is restored the position is updated and immediately available instead, with an incremental encoder, the zero set would be required.

The output code is used to specify the absolute position. The first natural choice would be the binary code because it can be easily processed by external devices but the issue is that it is extracted directly from the rotating disc: acquiring the position synchronized with the output data can be difficult due to the simultaneous change of more than one bit.
For example, if two consecutive binary codes as 7 (0111) and 8 (1000) are considered, it can be noticed that the status of all bits changes. So, if the attempt to read the code in a specific time is made, it could be difficult to assure the correctness of the read data because there is more than one bit change in the same time.
Therefore, a Gray code is used where only the status of one bit changes during two consecutive codes (even from the last to the first).

The Gray code can be easily converted to the binary by using a simple combinatory circuit (see tables above).

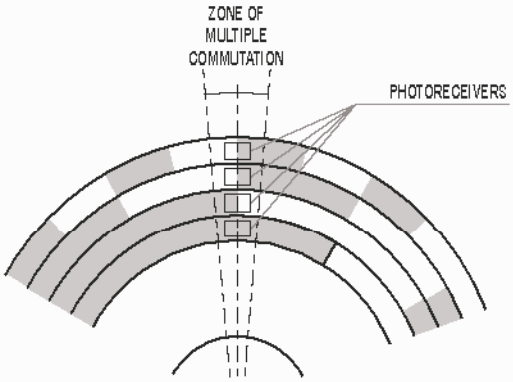

DECIMAL	BINARY	GRAY
0	0000	0000
1	0001	0001
2	0010	0011
3	0011	0010
4	0100	0110
5	0101	0111
6	0110	0101
7	0111	0100
8	1000	1100
9	1001	1101
10	1010	1111
11	1011	1110
12	1100	1010
13	1101	1011
14	1110	1001
15	1111	1000

THE GRAY EXCESS CODE

However, when the number of defined position is not a power of 2, even with the Gray code more than one bit can change simultaneously between the last and the first code value.
For instance, in a hypothetical 12 ppr absolute encoder, the code should be as the one shown in the aside. It is clear that between the positions 11 and 0 a 3 bit status simultaneous change may involve reading errors so that's not acceptable. The Gray excess code is used to maintain the typical one-bit variation specificity by making the 0 position corresponding to the N value. The N is a number that subtracted from the Gray code converted into binary provides the exact position value.

The formula to calculate the N value is:

$$N = \frac{2^n - IMP}{2}$$

Where : *IMP* is the number of PPR
2^n is the power of 2 multiple immediately higher than *IMP*

In our example *N* will be:

$$N = \frac{2^4 - 12}{2} = \frac{16-12}{2} = 2$$

POSITION	GRAY
0	0000
1	0001
2	0011
3	0010
4	0110
5	0111
6	0101
7	0100
8	1100
9	1101
10	1111
11	1110
0	0000

POSITION	GRAY
0	0000
1	0001
2	0011
3	0010
4	0110
5	0111
6	0101
7	0100
8	1100
9	1101
10	1111
11	1110
0	0000

Example: conversion of the position number 5

The Gray code of the position number 5 is 0100 which converted into binary is 0111 (7 in decimal).
Subtracting from 7 the N value the real position value which is 7-2=5) will be obtained.

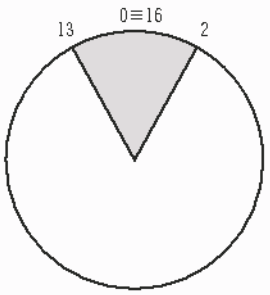

SINGLETURN ABSOLUTE ENCODER

A singleturn absolute encoder allows a precise acquisition of the angular position of the shaft to which the encoder is coupled to even if power goes out. Therefore, each single degree position is converted into a specific code (gray or binary) proportionally to the bit position.

MULTITURN ABSOLUTE ENCODER

The multiturn absolute encoder series is identified by the EAM prefix. This device allows a higher number of application representing such an interesting extension of the single turn encoder.
This type of encoder represent a significant linear extension maintaining flexibility according to customer specifications.
The encoder uses a main shaft to which one or more mechanical reducers are mounted in 'cascade' allowing a precise code reading even after a mechanical movement when the device is not powered. Safety and performances are among the highest in the market. Eltra's multiturn encoders are available with several electronic and mechanical output.

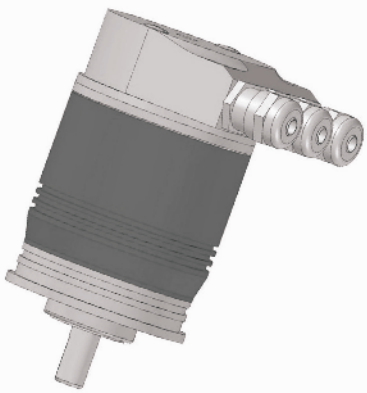

NUANCE®

©Copyright 2013 Eltra S.p.a. Unipersonale. All rights reserved. All informations in this catalog are subject to change without notice.
Eltra takes no responsibility for typographic errors. For the terms of sales please check the website www.eltra.it.

PARALLEL INTERFACE

Parallel output is the standard one for singleturn absolute encoders mainly because it provides the data output in a 'bit by bit' way so there is basically a pin for each bit.
So to reduce number of wiringsd alternative transmission protocol as Serial Synchronized Interface (SSI) or field buses (PROFIBUS) have been implemented.

Outp data can be in Gray or Binary format:

Output data in Gray format:

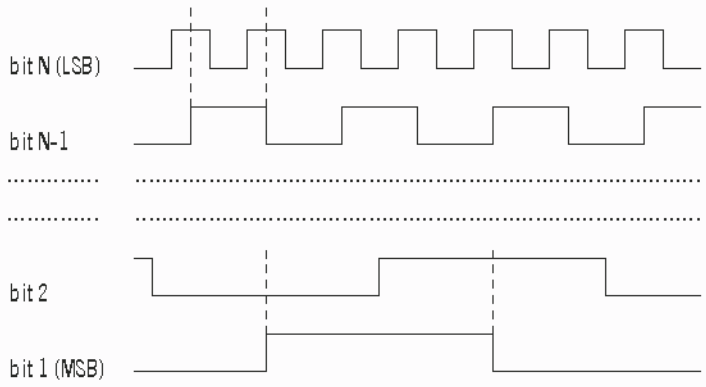

Output data can be available, depending on models, in both Gray and Binary standard. In the latest encoder generation, the Binary output is obtained by ASIC devices processing the Gray code signals coming from the photo-receiver circuit.
However, in the Binary code the correct output data issue is still intrinsically present due to the multiple bit status transitions between contiguous positions. In order to avoid this problem an output sync signal (STROBE) is given.
Output data in binary format:

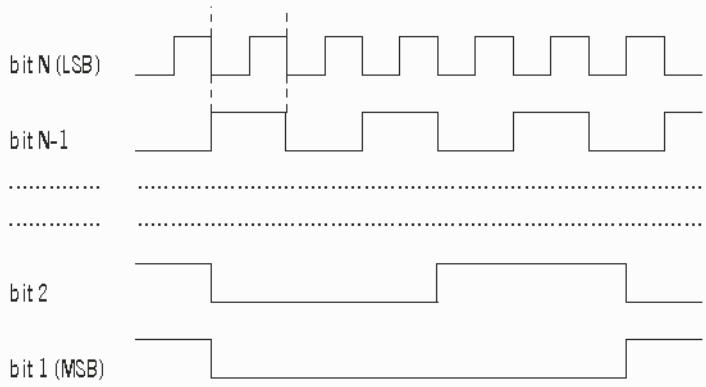

NUANCE®

There are several output configurations to satisfy different electronic specifications requested from the controllers. Standard outpus are: NPN, NPN OPEN-COLLECTOR, PNP OPEN COLLECTOR, PUSH-PULL.

COMMAND INPUTS AND OPTIONAL OUTPUTS

As previously mentioned, external signals can control and command encoder output as reported below.

STANDARD SIGNAL

- U/D: the encoder will increase the counting while the shaft rotates clock-wise. It is equivalent to rotate the encoder shaft in the opposite direction.

OPTIONAL SIGNALS
(directly contact our offices for availability):

- LATCH: when connected, it maintains the current data output. In this way, while the encoder shaft is turning, the output data doesn't change.
- RESET: it sets the zero position.
- STROBE: this signal is available only with binary code and indicates when it is possible to read the data. In fact, the logical status of the STROBE changes when the data is available (all bits have been updated).

INPUT	STATE HIGH	STATE LOW
U / D	Inverts the code	No effect
LATCH	Blocks the code	No effect
RESET	Output reset	No effect

NUANCE®

130218
© Copyright 2013 Eltra S.p.a. Unipersonale. All rights reserved. All informations in this catalogare subject to change without notice.
Eltra takes no responsibility for typographic errors. For the terms of sales please check the website www.eltra.it.

INTRODUCTION

Evolution in automation is continuously growing and so its request for precision in measurement devices and consequentially also in absolute encoder. To satisfy these demands, absolute encoders have been designed with higher and higher resolutions. However, higher precision means an increasing number of bits and consequently a growing need of wires. SSI interface was created in order to contain installation costs and to simplify wiring. This interface transmits data in a serial mode by using only two signals (CLOCK and DATA), independently from the precision of the encoder.

DESCRIPTION

The SSI interface allows transmission of the absolute encoder position data by a serial line synchronized by a clock.
The following figure shows the block diagram of an encoder featuring an SSI interface:

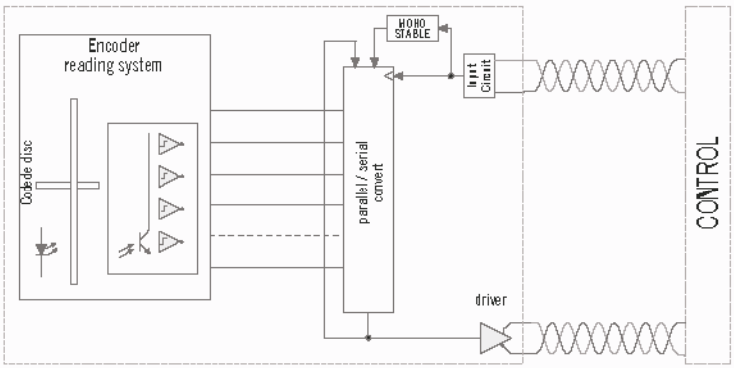

The working principle of an encoder with an SSI interface is very similar to a standard one. Main parts are: a light source, a disc with transparent and opaque windows, photo-electric receivers, comparison/trigger circuits, a parallel/serial converter, a mono-stable circuit, an input circuit for the clock signal and an output driver for the data signal.
The position data is obtained by the encoder reading system and continuously transmitted to a parallel/serial converter (based by a "shift register" with parallel loading). When the mono-stable circuit is activated by a clock signal transition, the data is stored and transmitted to the output synchronized with the clock signal. CLOCK and DATA signals are transmitted differentially (RS422) to enhance immunity from interference and to allow longer transmission distances.

NUANCE®

WORKING PRINCIPLE

When quiescent, CLOCK and DATA signals have a high logical level and the monostable circuit is disabled.

1. On the first CLOCK falling edge monostable is activated and parallel value at the P/S converter input is stored into the shift register.
2. On the next CLOCK rising edge Most Significant Bit (MSB) is transferred into the DATA signal output.
3. On the next CLOCK falling edge (when the signal is stable) the controller acquires value from DATA signal and monostable is re-activated.
4. On each further CLOCK rising edge following bits up to the least significant one are copied in the DATA signal output and then acquired by the controller on falling edge.
5. At the end of the CLOCK pulse sequence, when the external control has also acquired the value of the Least Significant Bit (LSB), the CLOCK pulse sequence stops and therefore the monostable is no longer re-activated.
6. Once the mono-stable time (Tm) has passed, the DATA signal returns to a high logical level and monostable disables itself.

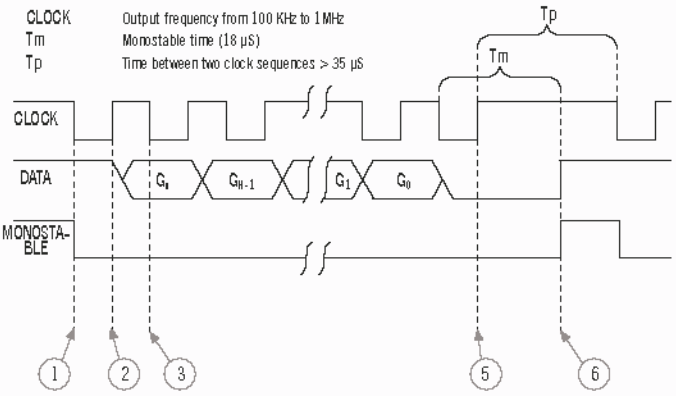

TRANSMISSION PROTOCOL

The frame length of the transmitted data depends only on the encoder type (singleturn or multiturn) and not on the resolution. In fact, the standard frame length for a singleturn encoder is 13 bits, while for a multiturn one is 25 bit.
With multitrun encoder with number of revolutions > 4096 frame lenght is 27 bits (14 bits for revolutions + 13 bits for singleturn) and 32 bits (19 bits for revolutions + 13 bits for singleturn).
Frame alignment is on the center as shown on below table:

n = number of bits per revolution

T = number of bits for revolutions **Tc** = clock period

Ta = $Tm - \frac{Tc}{2}$ **Tm** = monoflop time

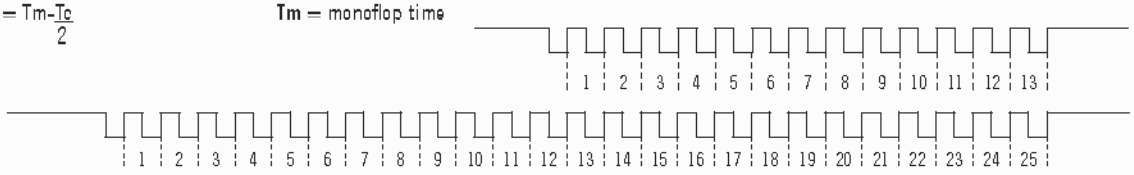

T	2^T																											Ta		2^n	n
12	4096	1	1	G_{n+11}	G_{n+10}	G_{n+9}	G_{n+8}	G_{n+7}	G_{n+6}	G_{n+5}	G_{n+4}	G_{n+3}	G_{n+2}	G_{n+1}	G_n	G_{n-1}	G_{n-2}	G_{n-3}	G_{n-4}	G_{n-5}	G_{n-6}	G_{n-7}	G_{n-8}	G_{n-9}	G_{n-10}	G_{n-11}	G_{n-12}	G_{n-13}	0	1	8192	13
11	2048	1	1	0	G_{n+10}	G_{n+9}	G_{n+8}	G_{n+7}	G_{n+6}	G_{n+5}	G_{n+4}	G_{n+3}	G_{n+2}	G_{n+1}	G_n	G_{n-1}	G_{n-2}	G_{n-3}	G_{n-4}	G_{n-5}	G_{n-6}	G_{n-7}	G_{n-8}	G_{n-9}	G_{n-10}	G_{n-11}	G_{n-12}	0	0	1	4096	12
10	1024	1	1	0	0	G_{n+9}	G_{n+8}	G_{n+7}	G_{n+6}	G_{n+5}	G_{n+4}	G_{n+3}	G_{n+2}	G_{n+1}	G_n	G_{n-1}	G_{n-2}	G_{n-3}	G_{n-4}	G_{n-5}	G_{n-6}	G_{n-7}	G_{n-8}	G_{n-9}	G_{n-10}	G_{n-11}	0	0	0	1	2048	11
9	512	1	1	0	0	0	G_{n+8}	G_{n+7}	G_{n+6}	G_{n+5}	G_{n+4}	G_{n+3}	G_{n+2}	G_{n+1}	G_n	G_{n-1}	G_{n-2}	G_{n-3}	G_{n-4}	G_{n-5}	G_{n-6}	G_{n-7}	G_{n-8}	G_{n-9}	G_{n-10}	0	0	0	0	1	1024	10
8	256	1	1	0	0	0	0	G_{n+7}	G_{n+6}	G_{n+5}	G_{n+4}	G_{n+3}	G_{n+2}	G_{n+1}	G_n	G_{n-1}	G_{n-2}	G_{n-3}	G_{n-4}	G_{n-5}	G_{n-6}	G_{n-7}	G_{n-8}	G_{n-9}	0	0	0	0	0	1	512	9
7	128	1	1	0	0	0	0	0	G_{n+6}	G_{n+5}	G_{n+4}	G_{n+3}	G_{n+2}	G_{n+1}	G_n	G_{n-1}	G_{n-2}	G_{n-3}	G_{n-4}	G_{n-5}	G_{n-6}	G_{n-7}	G_{n-8}	0	0	0	0	0	0	1	256	8
6	64	1	1	0	0	0	0	0	0	G_{n+5}	G_{n+4}	G_{n+3}	G_{n+2}	G_{n+1}	G_n	G_{n-1}	G_{n-2}	G_{n-3}	G_{n-4}	G_{n-5}	G_{n-6}	G_{n-7}	0	0	0	0	0	0	0	1	128	7
5	32	1	1	0	0	0	0	0	0	0	G_{n+4}	G_{n+3}	G_{n+2}	G_{n+1}	G_n	G_{n-1}	G_{n-2}	G_{n-3}	G_{n-4}	G_{n-5}	G_{n-6}	0	0	0	0	0	0	0	0	1	64	6
4	16	1	1	0	0	0	0	0	0	0	0	G_{n+3}	G_{n+2}	G_{n+1}	G_n	G_{n-1}	G_{n-2}	G_{n-3}	G_{n-4}	G_{n-5}	0	0	0	0	0	0	0	0	0	1	32	5
3	8	1	1	0	0	0	0	0	0	0	0	0	G_{n+2}	G_{n+1}	G_n	G_{n-1}	G_{n-2}	G_{n-3}	G_{n-4}	0	0	0	0	0	0	0	0	0	0	1	16	4
2	4	1	1	0	0	0	0	0	0	0	0	0	0	G_{n+1}	G_n	G_{n-1}	G_{n-2}	G_{n-3}	0	0	0	0	0	0	0	0	0	0	0	1	8	3
1	2	1	1	0	0	0	0	0	0	0	0	0	0	0	G_n	G_{n-1}	G_{n-2}	0	0	0	0	0	0	0	0	0	0	0	0	1	4	2

singleturn

multiturn

Number of revolutions

PPR

NUANCE®

© Copyright 2013 Eltra S.p.a. Unipersonale. All rights reserved. All informations in this catalog are subject to change without notice.
Eltra takes no responsibility for typographic errors. For the terms of sales please check the website www.eltra.it.

PROFIBUS INTERFACE

GENERAL DESCRIPTION

ISO 9001:2000

PROFIBUS GENERAL INFORMATION

PROFIBUS (Process Field Bus) is a serial communications standard for devices connected to automation networks (field bus). It is an open protocol defined by the DIN 19245 that became European standard as EN 50170 volume 2. Profibus is promoted by Siemens and is widely diffused all over Europe. Thanks to the definition of three different communication profiles DP, FMS and PA, this field bus is suitable for many requirements in automation system. Starting with applications requiring a high cyclical exchange speed of a reduced number of bit (Profibus DP), up to the management of complex communications between "intelligent" devices (Profibus FMS) or tasks strictly related to automation process (Profibus PA).
Hereinafter the attention will be focused on the DP version (decentralized periphery), which is the standard solution to manage devices by a bus. These devices usually are: I/O modules, sensors/transducers or actuators on a low level in automation systems.

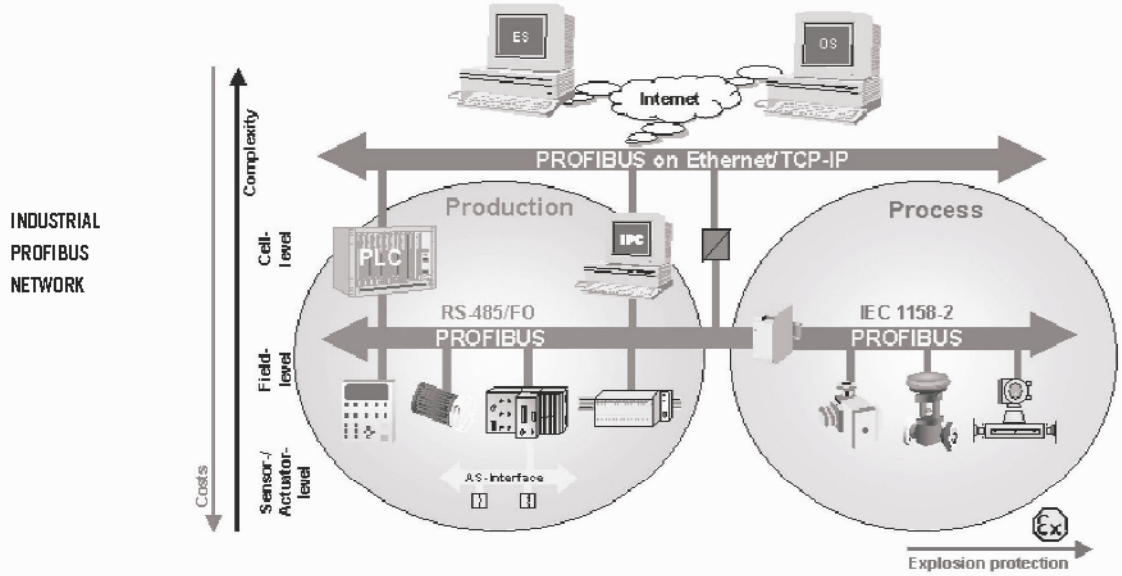

PROFIBUS DP CHARACTERISTICS

NETWORK TOPOLOGY: It is a common bus structure (closed on both sides) where up to 126 devices can be connected at the same time. If the physical support is an RS485 interface, up to 32 nodes can be inserted without using signal repeaters/re-generators.
HARDWARE LEVEL: In addition to the RS485 differential serial technology transmission, an optical fiber connection can be used. In any event, DP and FMS devices can co-exist in the same network. They share the same harware interface communication (they are the same levels 1 and 2 of the ISO/OSI stack). The established standard requires an extremely accurate communication speed between 9.6 kBaud (min) and 12 kBaud (max).
DEVICES PRESENT IN THE NETWORK: It is possible to divide the devices into three classes: class 1 Master DP(DPM1), class 2 Master DP (DPM2) and Slave. The class 1 includes all the devices periodically exchanging information with distributed peripheral (they can directly manage the I/O network data with the other nodes, mainly slaves). The class 2 masters are designated to con-figure and to monitor network status and devices connected to it. Slaves have the task of directly exchanging information with the external word in both directions (in and out). Typical examples of slaves are: digital I/O, encoders, drivers, valves, different types of transducers, etc.
BUS ACCESS METHODS: Two configurations are available in a bus with single or multi master operating ways: the 'Token Passing' one, for exchanging information about network management among possible available masters, and the well known 'polling interrogation' for the master-slave communication.

NUANCE

The main characteristics implemented in the Profibus DP protocol are as follows:

Periodic data exchange: after the slave initialization step, every master is configured in order to exchange a maximum of 244 input bytes and 244 output bytes with every slave. The effective data exchange rate is based on the selected BaudRate, on the nodes present in the network and on the specific bus settings. Considering the maximum data exchange rate of 12 Mbaud, the Profibus DP is one of the fastest field buses.

Synchronization: command controls are available (they are sent by the master in multicast). This gives the possibility to create a synchronous acquisitions through a slave, a group or all the slaves (Freeze Mode). Outputs sent to the slave have similar behavior. (Sync Mode).
Parameterization and configuration security: After a preset period of time - if the communication between the master/s and the slave/s is not repeated - the system goes into a safe status.

Diagnostic functions: each slave can require to the master to be set up for reading its own diagnostic. In such way any possible problem occouring in the slave can be easily localized. The diagnostic can contain up to 244 bytes of information. Among them, the first six are mandatory for each DP slave.

Dynamic slave management: there is the possibility to activate or disactivate slaves present in the network. Moreover, it is possible to change by the bus slaves addresses that make possible this function.

Easy network configuration: main characteristics of each device present in the network are listed in the form of a GSD file complying to Profibus specifications. This simplify the set up and the configuration of the device by a graphic tools suitable for the purpose, such as the Siemens COM PROFIBUS software. As mentioned, the master-slave exchange data takes place periodically depending on the topology of the network and on the number of nodes present. However, before this step the slave has to be successfully parameterized and configured.

Parameter setting: the master sends to the slave a series of parameters necessary to specify its operation. The standard requires 7 bytes containing the mandatory information for the slave. Additional data can start from the eighth byte in the DU field (Data Unit, for more information see the Profibus DP) up to a maximum of 244 bytes for the communication frame.

Configuration: This step starts when the master has successfully set slave's parameters. During this step the master specifies the number and type of data, or better, the number of bytes to be exchanged with the slave both for incoming and outgoing information. This data is also present in the DU field of the communication frame: if the slave accepts the configuration, it can periodically exchange with the master.

Periodic exchange: The master specifies within the DU field frame the necessary information and the slave sends requested data within the reply frame. During periodic exchange, the slave may advise the master that a new diagnostic data is ready and then it asks to the master if it prefers reading this information in the next polling instead of the input data coming from the peripheral.

MASTER - SLAVE COMMUNICATIONS

As already mentioned, the master-slave data exchange is periodic and essentially depends on the network topology and on the present node number. However, before starting the data exchange, it is necessary that slave parameter settings and slave configuration have been successfully completed. More details are as follows:

Parameter setting: during this step the master sends to the slave a series of operating parameters necessary for specifying its operation. The standard requires 7 bytes containing the mandatory information for the slave. Additional data can start from the eighth byte in the DU field (Data Unit, for more information see the Profibus DP) up to a maximum up to a maximum of 244 bytes.

Configuration: when the master successfully set slave parameters, the configuration process starts. Then, the master specifies the number and type of data represented from the incoming and outgoing bytes number which has to be exchanged with the slave. This data is also present in DU field; if the slave accepts the configurations, it will begin to periodically exchange data with the master.

Periodic exchange: the master specifies within the DU field frame the needed information and the slave will send requested data in the reply frame. During periodic data exchange the slave may advise the master that a new diagnostic data is ready and then it asks to the master if it prefers reading this information in the next polling instead of the input data coming from the peripheral.

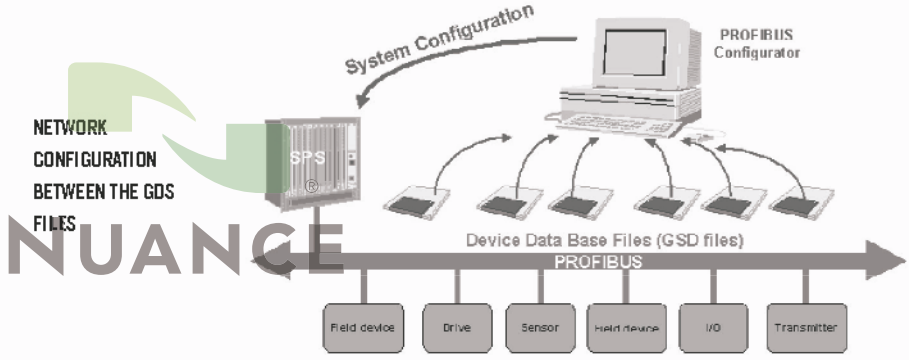

NUANCE

© Copyright 2013 Eltra S.p.a. Unipersonale. All rights reserved. All informations in this catalog are subject to change without notice.
Eltra takes no responsibility for typographic errors. For the terms of sales please check the website www.eltra.it.

EA 40 T

ABSOLUTE SINGLETURN ENCODER
FOR TOOL CHANGE APPLICATIONS

ISO 9001:2000

MAIN CHARACTERISTICS

ø 40 T absolute encoders are specifically designed to be directly mounted on machine tools and they are suitable for being mounted on turrets for tool change (8 or 12 positions). The timing between encoder and turret can be overwiewed by a led mounted on the enclosure. According to that it is possible to visualise the position of the first tool making easier and quicker the mounting for the operator.
Main characteristics:

- Easy mechanical mounting
- Several output types available
- 8 and 12 position turn configuration
- IP 66 sealing

ORDERING CODE

EA	40	T	12	B	8/28	R	P	6	S	3	P	R	.	XXX

SERIES
singleturn absolute encoder EA

SIZE
mm 40

TYPE
synchronous flange ø 24 mm T

POSITIONS
8
12

CODE TYPE
Binary B

POWER SUPPLY
5 V DC 5
8 ... 28 V DC 8/28

ELECTRONIC INTERFACE
NPN N
NPN OPEN COLLECTOR C
PNP R
PNP OPEN COLLECTOR U

LOGIC
N Negative
P Positive

SHAFT DIAMETER
6 mm

ENCLOSURE RATING
S IP 66

MAX ROTATION SPEED
3 3000 rpm

OUTPUT TYPE
P cable output (standard length 0.5 m)

OUTPUT DIRECTION
R radial

VARIANT
XXX custom version

NUANCE®

EA 40 T

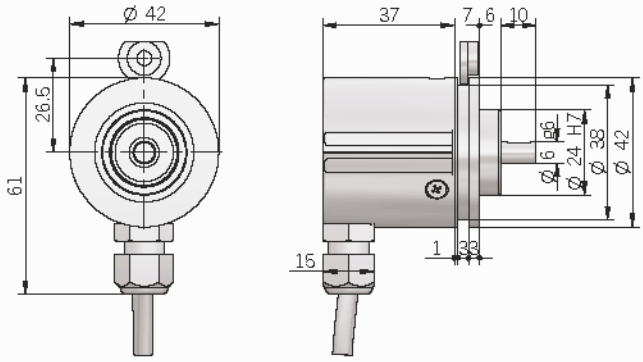

Electrical specifications

Positions	8 / 12
Power supply	5 V DC 8 ... 28 V DC
Current consumption without load	100 mA max
Max load current	40 mA per channel
Electronic interface	NPN / NPN OPEN COLLECTOR / PNP / PNP OPEN COLLECTOR
Max output frequency	25 kHz output code
Code type	Binary
Counting direction	increasing clockwise (shaft view)
Electromagnetic compatibility	IEC 61000-6-2 IEC 61000-6-4

Mechanical specifications

Shaft diameter	6 mm
Enclosure rating	IP 66 (IEC 60529)
Max rotation speed	3000 rpm
Max shaft load	5N (0.5 Kp) axial 5N (0.5 Kp) radial
Shock	50 G, 11 ms (IEC 60068-2-27)
Vibrations	10 G, 10÷2000 Hz (IEC 60068-2-6)
Bearings	n° 2 ball bearings
Bearings life	10^9 revolutions
Shaft material	1.4305 / AISI 303 stainless steel
Body material	EN-AW 2011 aluminium
Housing material	PA66 reinforced with fiber glass
Operating temperature	0° ... 60 °C
Storage temperature	-15° ... 70 °C
Weight	100 g

Signal configuration

Wire color	WHITE	YELLOW	GREEN	VIOLET	RED	BLACK	BROWN	BLUE
Turn position	bit 1	bit 2	bit 3	bit 4	Parity	Strobe	+Vdc	0 Volt
1	•				•	•		
2		•			•	•		
3	•	•				•		
4			•		•	•		
5	•		•			•		
6		•	•			•		
7	•	•	•		•	•		
8				•	•	•		
9	•			•		•		
10		•		•		•		
11	•	•		•	•	•		
12			•	•		•		

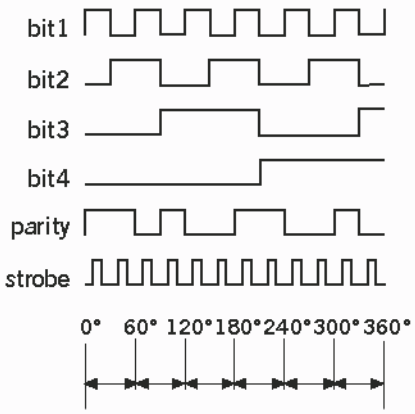

NUANCE®

©Copyright 2013 Eltra S.p.a. Unipersonale. All rights reserved. All informations in this catalogare subject to change without notice.
Eltra takes no responsibility for typographic errors. For the terms of sales please check the website www.eltra.it.

EA
PARALLEL - SSI
SINGLETURN ABSOLUTE ENCODER

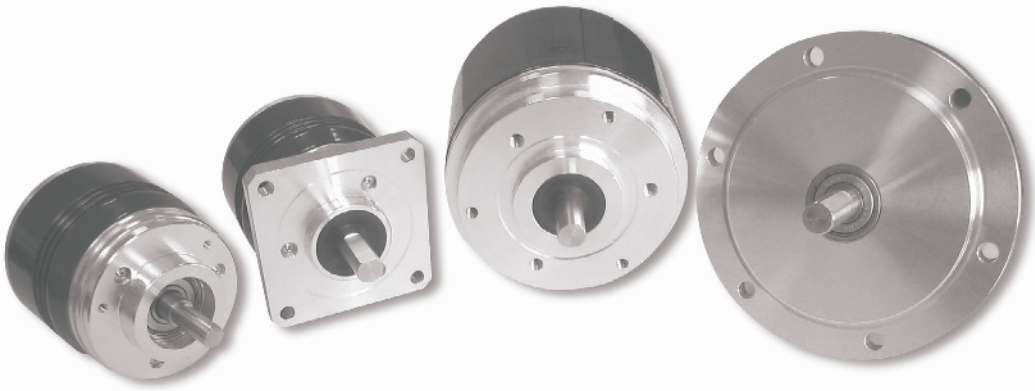

ABSOLUTE SINGLETURN PARALLEL ENCODER DESCRIPTION

Resolutions available up to 13 bit and 8192 ppr. Wide application range thanks to several models and different flange types. This series assures high reliability even in the most tough industrial applications. It is available with cable connector output and protection class up to IP 66. Gray and binary code output with several electronics available: NPN, NPN OPEN COLLECTOR, PNP, PNP OPEN COLLECTOR and PUSH PULL.

ABSOLUTE SINGLETURN SSI ENCODER DESCRIPTION

This series is designed to satisfy the new serial transmission philosophy of data output. A 13 bit word data is the standard output for these encoders. Meaningful bits are proportionally to the chosen encoder resolution. This type of transmission reduces wiring issues in order to maintain outstanding device performances. Only a four wire connection is needed: a pair for the position code and the other one for the clock signal. Both signals are transmitted by differential logic. In order to satisfy all dimensional requirements, a wide and complete range of mechanical combinations are available.

NUANCE®

PARALLEL ENCODER ORDERING CODE

EA 63 A 512 G 8/28 N N L 10 X 6 MA R . XXX

SERIES
absolute encoder singleturn EA

DIMENSION
mm 58
mm 63
mm 90
mm 115

TYPE
synchronous flange ø 31.75 mm (EA63) A
synchronous flange ø 40 mm (EA90) A
RE0444 flange (EA115) A
synchronous flange ø 50 mm (EA58) B
fixing flange ø 36 mm (EA58) C
centering square flange ø 31.75 mm (EA63) D
centering square flange ø 50 mm (EA63) E
blind hollow shaft with spring (EA58 / 63) F
blind hollow shaft with anti-rotation pin (EA63) G

RESOLUTION
(powers of 2) ppr from 2 to 8192
(multiples and submultiples of 360)
ppr from 90 to 3600
(multiples and submultiples of 1000)
ppr from 250 to 4000
N.B.:please directly contact our offices for pulses availability

CODE TYPE
Binary B
Gray (standard) G
Binary offset code (0-XXX) BC
Gray offset code (0-XXX) GC
powers of 2 except for the offset code

INPUT VOLTAGE
5 V DC 5
8 ... 28 V DC 8/28

OUTPUT TYPES
NPN (negative logic standard) N
NPN OPEN COLLECTOR (negative logic standard) C
PNP (positive logic standard) R
PNP OPEN COLLECTOR (positive logic standard) U
PUSH PULL with short circuit protection (positive logic standard) P

LOGIC
N Negative
P Positive

OPTIONS
L Latch
S Strobe (only for binary code)
X to be reported if not used

SHAFT DIAMETER
6 mm - 58B
8 mm - 58B - 63A/D/E - 90A
9 mm (9.52 mm 3/8") - 63A/D/E - 90A
10 mm - 58B/C - 63A/D/E - 90A - 115A
11 mm - 115A

BORE DIAMETER ONLY FOR MOD. 58F - 63F/G
8 mm
9 mm (9.52 mm 3/8")
10 mm
12 mm
14 mm
15 mm

MAX ROTATION SPEED
3 3000 rpm with IP 66
6 6000 rpm

ENCLOSURE RATING
X IP 54
S optional IP 66 (with the exception of EA58 F - EA63 F/G - EA115)

OUTPUT TYPE
PD cable output 16 poles (standard length 1.5m)
PE cable output 32 poles (standard length 1.5m)
MA 19 poles MS type connection

OUTPUT DIRECTION
A axial
R radial

VARIANT
XXX custom version

Output connections for **PARALLEL** encoder

Function	B / G	16 wire cable colours	32 wire cable colours	Pin "M19MP"
bit 1 (LSB)	B^0 / G^0	green	green	A
bit 2	B^1 / G^1	yellow	yellow	B
bit 3	B^2 / G^2	blue	blue	C
bit 4	B^3 / G^3	brown	brown	D
bit 5	B^4 / G^4	orange	orange	E
bit 6	B^5 / G^5	white	white	F
bit 7	B^6 / G^6	gray	gray	G
bit 8	B^7 / G^7	violet	violet	H
bit 9	B^8 / G^8	gray-pink	gray-pink	J
bit 10	B^9 / G^9	white-green	white-green	K
bit 11	B^{10} / G^{10}	brown-green	brown-green	L
bit 12	B^{11} / G^{11}	white-yellow	white-yellow	M
bit 13	B^{12} / G^{12}	yellow-brown	yellow-brown	N
LATCH	/	/	yellow-gray	R
0 Volt	/	black	black	T
U / D	/	red-blue	red-blue	U
+ Vdc	/	red	red	V

NUANCE

130329
©Copyright 2013 Eltra S.p.a. Unipersonale. All rights reserved. All informations in this catalog are subject to change without notice.
Eltra takes no responsibility for typographic errors. For the terms of sales please check the website www.eltra.it.

SSI ENCODER ORDERING CODE

EA 63 A 512 G 8/28 S X X 10 X 6 MC R . XXX

SERIES
absolute encoder singleturn EA

SIZE
mm 58
mm 63
mm 90
mm 115

TYPE
synchronous flange ø 31.75 mm (EA63) A
synchronous flange ø 40 mm (EA90) A
RE0444 flange (EA115) A
synchronous flange ø 50 mm (EA58) B
fixing flange ø 36 mm (EA58) C
centering square flange ø 31.75 mm (EA63) D
centering square flange ø 50 mm (EA63) E
blind hollow shaft with spring (EA58 / 63) F
blind hollow shaft with anti-rotation pin (EA63)G

RESOLUTION
(powers of 2) ppr from 2 to 8192
(multiples and submultiples of 360)
ppr from 90 to 3600
(multiples and submultiples of 1000)
ppr from 250 to 4000
N.B.:please directly contact our offices for pulses availability

CODE TYPE
Binary B
Gray (standard) G
Binary offset code (0-XXX) BC
Gray offset code (0-XXX) GC
N.B.: powers of 2 except for the offset code

POWER SUPPLY
5 V DC 5
8 ... 28 V DC 8/28

OUTPUT TYPE
SSI (Serial Synchronous Interface) S

LOGIC
X to be reported if not used

OPTIONS
X to be reported if not used
ZE code reset

SHAFT DIAMETER
6 mm - 58B
8 mm - 58B - 63A/D/E - 90A
9 mm (9.52 mm 3/8") - 63A/D/E - 90A
10 mm - 58B/C - 63A/D/E - 90A - 115A
11 mm - 115A

BORE DIAMETER ONLY FOR MOD. 58F - 63F/G
8 mm
9 mm (9.52 mm 3/8")
10 mm
12 mm
14 mm
15 mm

ENCLOSURE RATING
X IP 54
S optional IP 66 with the exception of EA58 F - EA63 F/G - EA115

MAX ROTATION SPEED
3 3000 rpm with IP 66
6 6000 rpm

OUTPUT TYPE
PC cable output (standard length 1.5m)
MC 7 poles MS type connection
HA 12 poles H type connection

OUTPUT DIRECTION
A axial
R radial

VARIANT
XXX custom version

Output connections for SSI encoder

Funzione	Cable colours	Pin "M07MP"	Pin "H12"
+ Vdc	red	G	8
0 Volt	black	F	1
U / D	red-blue	E	5
data +	green	C	2
data -	brown	D	10
clock +	yellow	A	3
clock -	orange	B	11
RESET	white	/	4

NUANCE ®

EA 63 A

* servofasteners not included

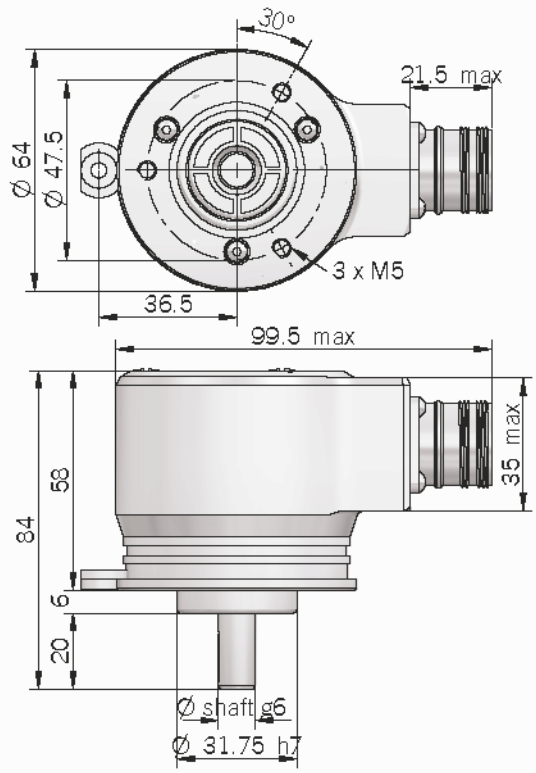

EA 58 B

* servofasteners not included

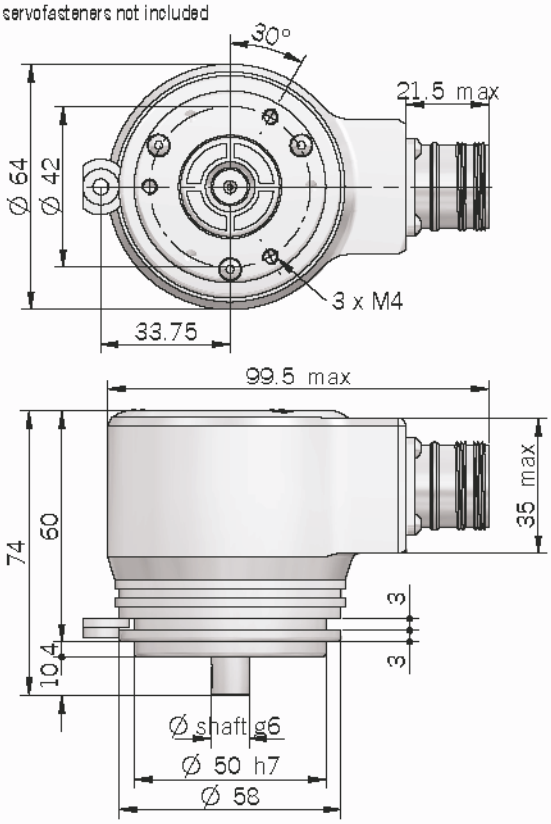

EA 58 C

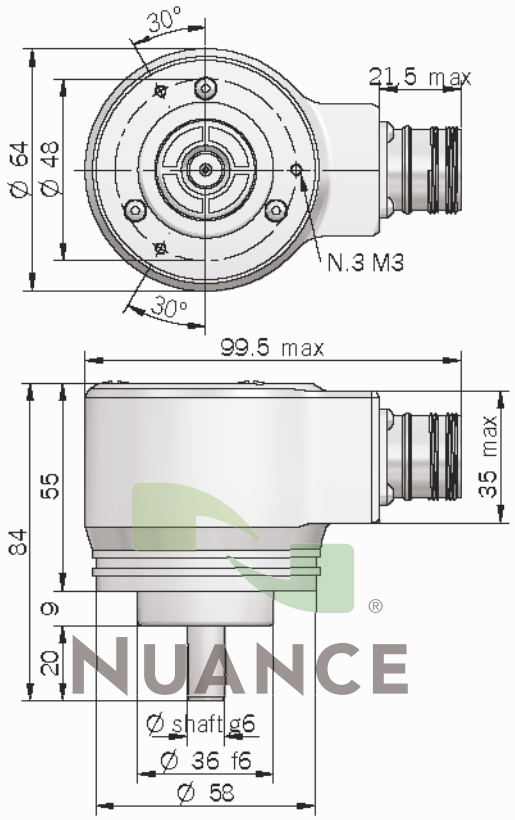

EA 63 D

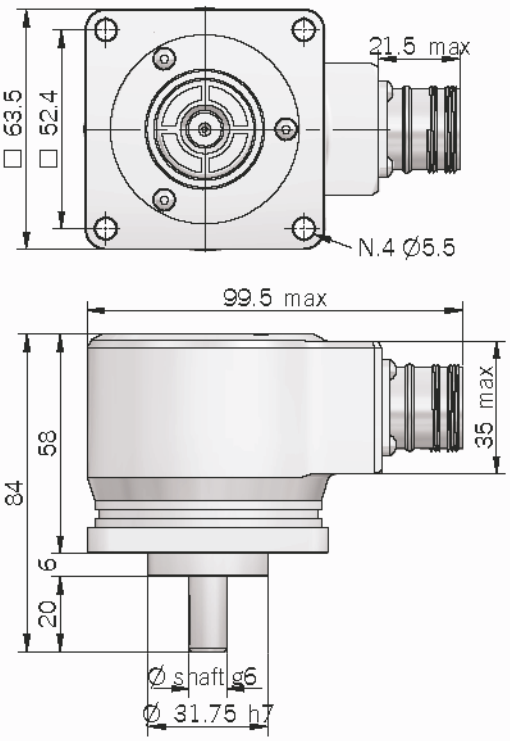

130329
©Copyright 2013 Eltra S.p.a. Unipersonale. All rights reserved. All informations in this catalog are subject to change without notice.
Eltra takes no responsibility for typographic errors. For the terms of sales please check the website www.eltra.it.

EA 63 E

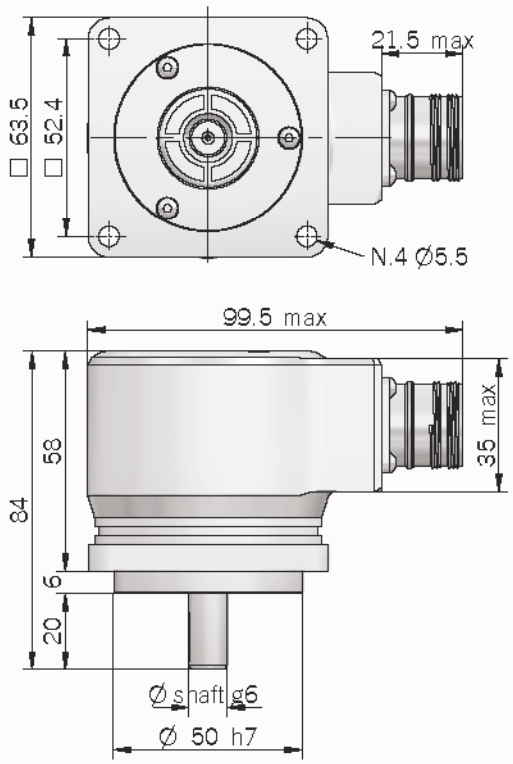

EA 58 F

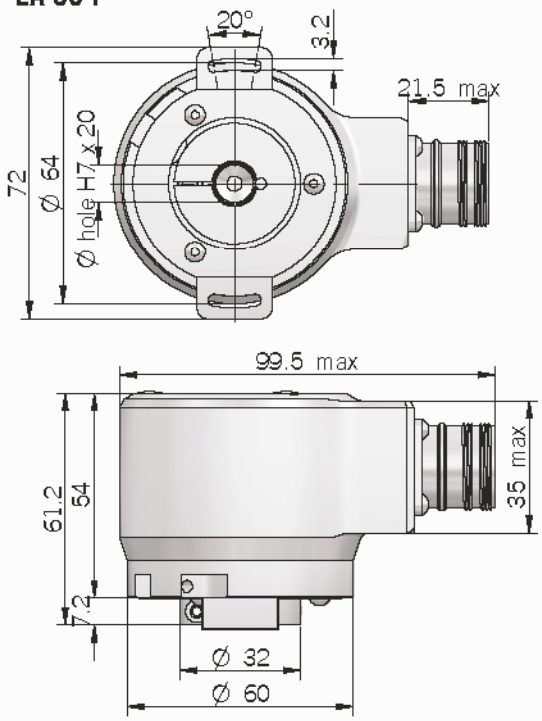

EA 63 F - G

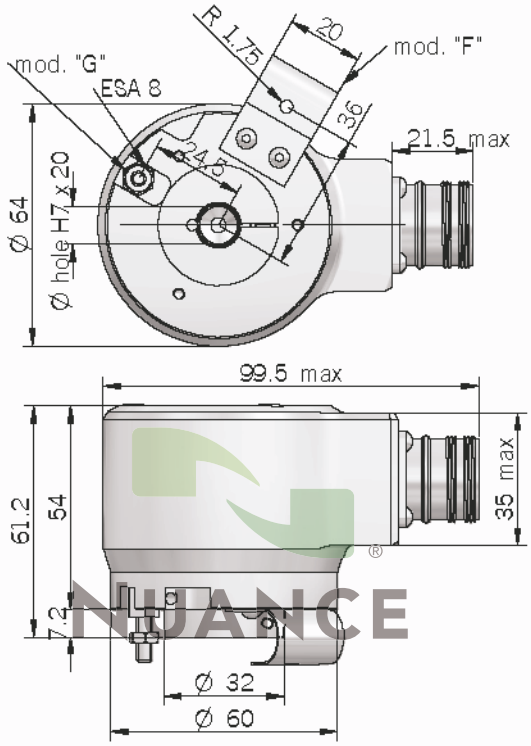

EA 90 A

* servofasteners not included

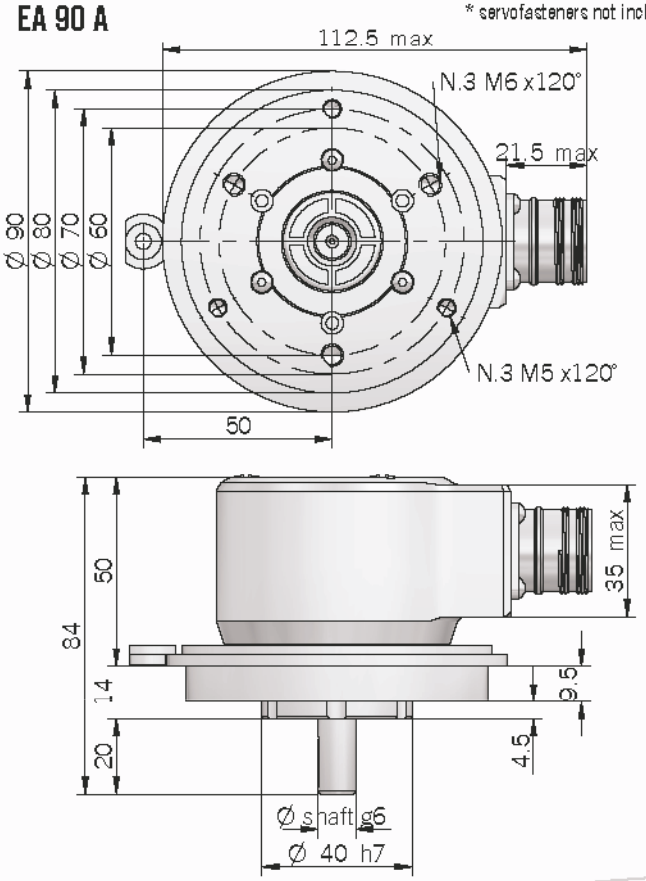

NUANCE®

EA 115 A

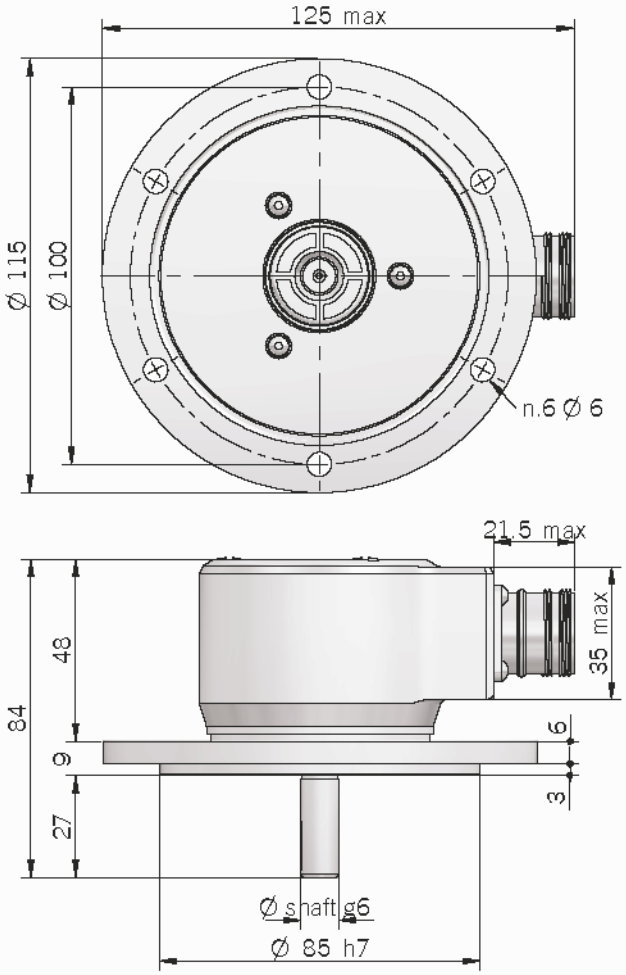

Dimensions with cover axial output

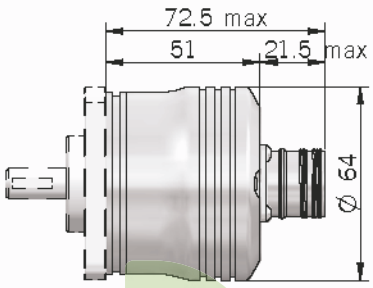

Electrical specifications

Resolution	from 2 to 8192
Power supply	5 V DC ± 10% (only SSI) 8 ... 28 V DC ± 5%
Current consumption without load	100 mA
Max load current	20 mA for channel (push pull) 40 mA for channel (NPN / PNP)
Electronic interface	NPN / NPN OPEN COLLECTOR / PNP / PNP OPEN COLLECTOR / PUSH PULL / RS422 SSI
Auxiliary inputs (U/D - Latch - Reset)	active high (+Vdc) *connect to 0V if not used / Reset t_{min} 150 ms*
Max output frequency	25 kHz parallel 100 kHz ... 1MHz SSI
SSI monostable time (Tm)	18 µs
SSI pause time (Tp)	> 35 µs
Accuracy	± 1/2 LSB
Counting direction	decreasing clockwise (shaft view)
Start-up time	150 ms
Electromagnetic compatibility	IEC 61000-6-2 IEC 61000-6-4

Mechanical specifications

Shaft diameter (mm)	6 (58 B) 8 (58 B - 63 A / D / E - 90 A) 9.52 (63 A / D / E - 90 A) 10 (58 B / C - 63 A / D / E - 90 A - 115 A) 11 (115 A)
Bore diameter (only for mod.58F - 63F/G)	8 / 9 / 10 / 12 / 14 / 15 mm
Max rotation speed	6000 rpm continuous 3000 rpm continuous for 63G 3000 rpm with IP66
Max shaft load	10 N (1 Kp) axial with ø6 shaft 20 N (2 Kp) radial with ø6 shaft 100 N (10 Kp) axial 100 N (10 Kp) radial
Shock	50 G, 11 ms (IEC 60068-2-27)
Vibrations	10 G, 10 ... 2000 Hz (IEC 60068-2-6)
Bearings life	10^9 revolutions
Bearings	n° 2 ball bearings
Shaft material	AISI 303 stainless steel / 1.4305
Body material	EN-AW 2011 aluminum
Housing material	EN-AW 2011 aluminum
Enclosure rating	IP 54 (IEC 60529) IP 66 (IEC 60529) optional - 58B/C - 63A/D/E - 90A
Operating temperature	0° ... +60 °C
Storage temperature	-15° ... +70 °C
Weight	350 g - 58B/C - 63A/D/E/G 750 g - 90A - 115A
Accessories	set N° 3 fastners for models -63A -58B -90A Ord. Cod.: 94080001 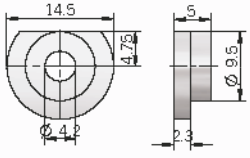

© Copyright 2013 Eltra S.p.a. Unipersonale. All rights reserved. All informations in this catalog are subject to change without notice.
Eltra takes no responsibility for typographic errors. For the terms of sales please check the website www.eltra.it.

EA PROFIBUS

SINGLETURN ABSOLUTE ENCODER

PRESENTATION

The Eltra singleturn Profibus encoder series (Identification Number 0x0599) is complying to the Profibus DP standard as described on the European Standard EN 50170 Volume 2. Particularly, Eltra Profibus encoders are according to "PROFIBUS-Profile for Encoders, Order No. 3.062". The Profibus DP interface maintains the same maximum resolution and characteristics (8192 ppr) of the stand-alone version and adds the plus of the Profibus DP network.

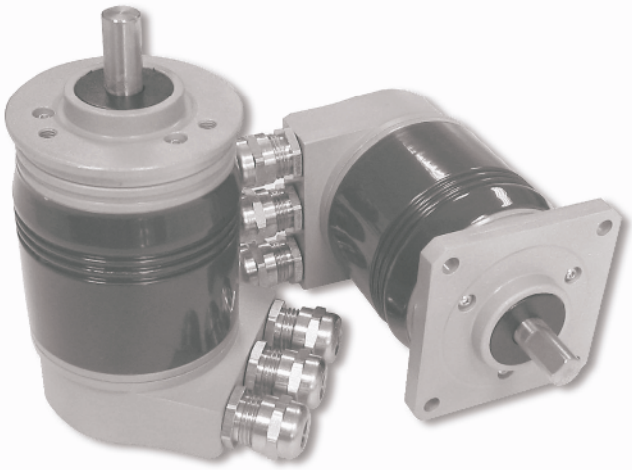

By the Profibus DP network is possible:
- During the periodic data exchange, getting the indication of the angular position from the encoder.
- During the set up, setting the resolution as number positions within the single turn.
- During the set up, changing the default increase direction count.
- To perform the PRESET operation (set the encoder to read a specific position).
- Reading the diagnostic operating mode.
- Getting info about the code supplied by the device.

Directly from the device it is possible:
- To display the ON/OFF status.
- To display the device activity on the bus.
- Setting the device address.
- If requested, inserting in the bus the termination resistance.
- Inverting the counting direction.

HARDWARE INSTALLATION DEVICE

Installing the Eltra Profibus encoder in a network requires the execution of the standard steps necessary for configuring any Profibus DP slave. The sequence of steps is as follow:
1. Commisioning the slave on the master (see corresponding paragraph).
2. Wiring the encoder into the Profibus network using or not terminations depending on the physical position the devices has in the bus.
3. Directly set the address (which must be unique in the network and the same as the one chosen in point 1) for the slave.
4. Preparing the master side application/s and setting up the Profibus network.

On the back cover of the encoder (see picture) there is a led inspection window.
The device operating status can be controlled by the two led through the window. The green one shows the power presence and must be permanently switched on.
The red led switches off only during the periodic data exchange between the Profibus master and the encoder.
In the section plan along side the 2 dip-switches of termination line and the 8 dip switches of device address are shown. In the particular shown configuration, the 2 termination line contacts are set to OFF so the termination of the bus in not expected to occur on the encoder.
Only seven out of the eight available dip-switches are used to address the slave because the maximum number of devices that can be connected to a Profibus network is 126. For addressing the device, only the first seven dip switches out of the eight available are used.
The contact number 8 is the LSB while the number 2 is the MSB.

The eight contact (1) is used to invert the code.

NUANCE®

CONNECTION TO THE NETWORK

For connecting Profibus encoders to the network, cables within the device can be accessed by the three skintop (in any event only two of them can be used).

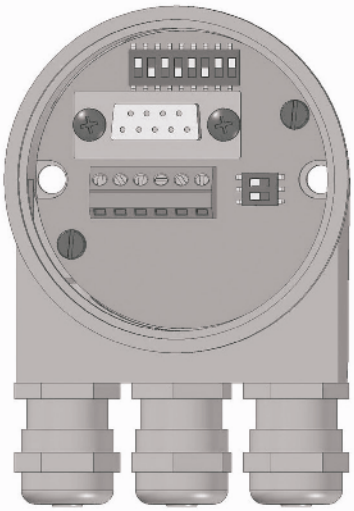

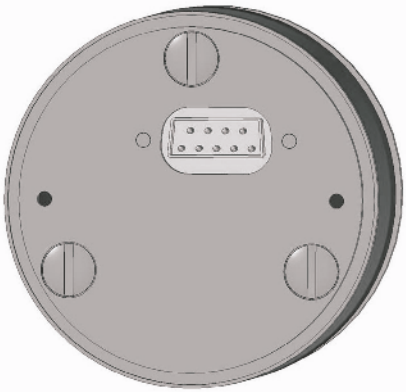

TERMINAL BLOCK ACCESS

To access the terminal block, unscrew the two screws on the rear plug and release the rear case from the main one by sliding it out from the sunken connector. Then, connect wires according to the diagram on the connector and as reported on the table on the right.

Please NOTE:
to set and configure the slave into the Profibus DP master ('commisioning' step) it is necessary to use the "Exx_0599.gsd" file delivered with the encoder. This file can eventually be downloaded from our following web site: www.eltra.it.

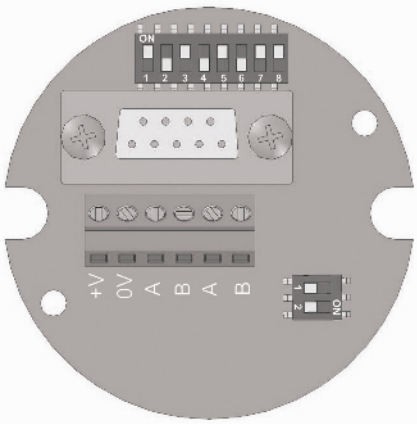

Cable connections	
+V	SUPPLY VOLTAGE
0V	GROUND
A	PROFIBUS DP LINE OUT (Green)
B	PROFIBUS DP LINE OUT (Red)
A	PROFIBUS DP LINE IN (Green)
B	PROFIBUS DP LINE IN (Red)

130405
© Copyright 2013 Eltra S.p.a. Unipersonale. All rights reserved. All informations in this catalog are subject to change without notice.
Eltra takes no responsibility for typographic errors. For the terms of sales please check the website www.eltra.it.

LED

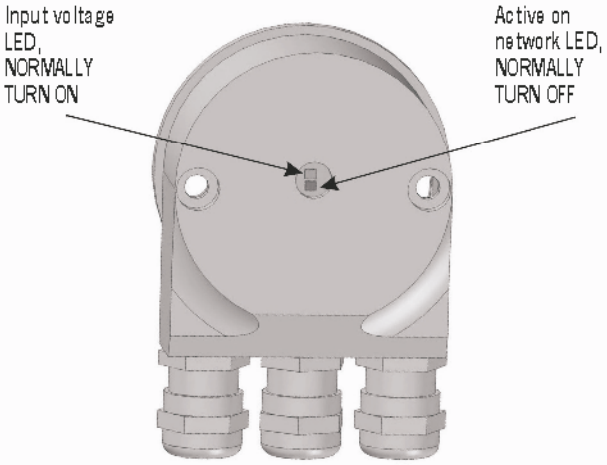

NETWORK SPECIFICATIONS

Usually, an A type cable is used to wire a DP/FMS network. This cable has to have the following characteristics:

Parameter	Cable type A
Characteristics in Ω	135 ... 165 at a frequency of (3 ... 20 Mhz)
Operating capacity (pF/m)	< 30
Loop resistance (Ω/km)	< = 110
Core diameter (mm)	> 0.64*)
Core cross-section (mm²)	> 0.34*)

This cable allows an optimum network utilization. In fact, it is possible to reach the maximum communication speed allowed (12MBaud). However, there are some limitations due to the maximum physical dimensions of a bus segment as follows:

Baud rate (kbit/s)	Range/Segment
9.6	1200 m
19.2	1200 m
93.75	1200 m
187.5	1000 m
500	400 m
1500	200 m
12000	100 m

Finally, main physical and topographical specifications of a Profibus network are as follows:

Specifications	
Maximum number of station partecipating in the excahnge of user data	DP: 126 (address from 0 ... 125) FMS: 127 (address from 0 ... 126)
Maximum number of stations per segment including repeaters	32
Available data transfer rates in kbit/s	9.6, 19.2, 45.45, 93.75, 187.5, 500, 1500, 3000, 6000, 12000
Max number of segments in series	According to EN 50170, a maximum of 4 repeaters are allowed between any two stations. Dependent on the repeater type and manufacturer, more than 4 repeaters are allowed in some cases. Refer to the manufactured's technical specification for details.

DIP-SWITCHES SETTING

Below it is reported an example of the standard position of address and termination dip switches as well as settings for closing a Profibus line.

STANDARD SETTING

LINE OPEN

In this example the device address is set equal to 1001101 from bit number 2 to bit number 8 corresponding to HEX 77. Meanwhile, the first bit represents the inversion of the code (activated in this case).

LINE CLOSE

Output connections for PROFIBUS® DP encoder			
Function	S3 connector 5-pin (power supply)	S3 connector 5-pin (line out)	S3 connector 5-pin (line in)
+ Vdc	2		
0 Volt	4		
signal A (out)		2	
signal B (out)		4	
signal A (in)			2
signal B (in)			4

NUANCE

PROFIBUS ENCODER ORDERING CODE

EA 63 A 4096 B 12/28 F X X 10 X 3 P3 R . XXX

SERIES
absolute encoder singleturn EA

SIZE
mm 58
mm 63
mm 90
mm 115

TYPE
synchronous flange ø 31.75 mm (EA63) A
synchronous flange ø 40 mm (EA90) A
RE0444 flange (EA115) A
synchronous flange ø 50 mm (EA58) B
fixing flange ø 36 mm (EA58) C
centering square flange ø 31.75 mm (EA63) D
centering square flange ø 50 mm (EA63) E
blind hollow shaft with spring (EA58 / 63) F
blind hollow shaft with anti-rotation pin (EA63) G

RESOLUTION
4096 / 8192
N.B: programmable 2 ... 4096 / 2 ... 8192 during commissioning

CODE TYPE
Binary B

POWER SUPPLY
12 ... 28 V DC 12/28

ELECTRONIC INTERFACE
PROFIBUS DP V0 CLASS 2 F

LOGIC
to be reported if not used X

OPTIONS
to be reported if not used X

SHAFT DIAMETER
6 mm - 58B
8 mm - 58B - 63A/D/E - 90A
9 mm (9.52 mm 3/8") - 63A/D/E - 90A
10 mm - 58B/C - 63A/D/E - 90A - 115A
11 mm - 115A

BORE DIAMETER ONLY FOR MOD. 58F - 63F/G
8 mm
9 mm (9.52 mm 3/8")
10 mm
12 mm
14 mm
15 mm

ENCLOSURE RATING
X IP 54
S optional IP 66 with the exception of EA63F/G - EA115

MAX ROTATION SPEED
3 3000 rpm with IP 66
6 6000 rpm

OUTPUT TYPE
P3 cable glands
S3 M12 connectors

OUTPUT DIRECTION
R radial

VARIANT
XXX custom version

NUANCE®

©Copyright 2013 Eltra S.p.a. Unipersonale. All rights reserved. All informations in this catalogare subject to change without notice.
Eltra takes no responsibility for typographic errors. For the terms of sales please check the website www.eltra.it.

EA 63 A

* servofasteners not included

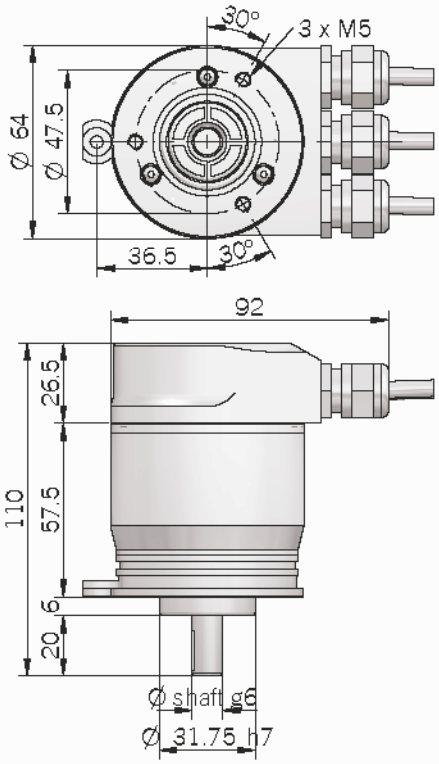

EA 58 B

* servofasteners not included

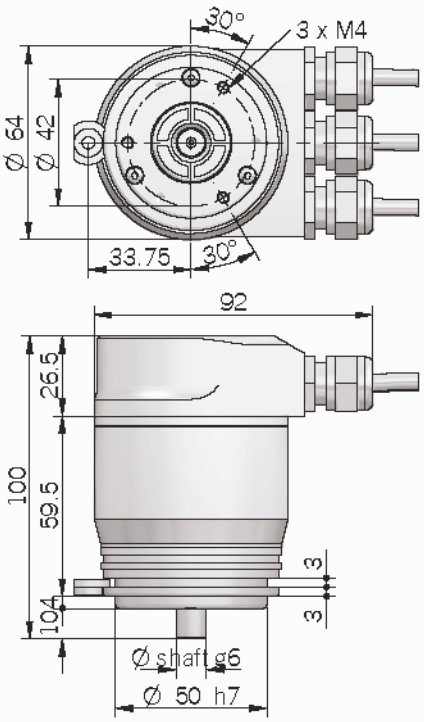

EA 58 C

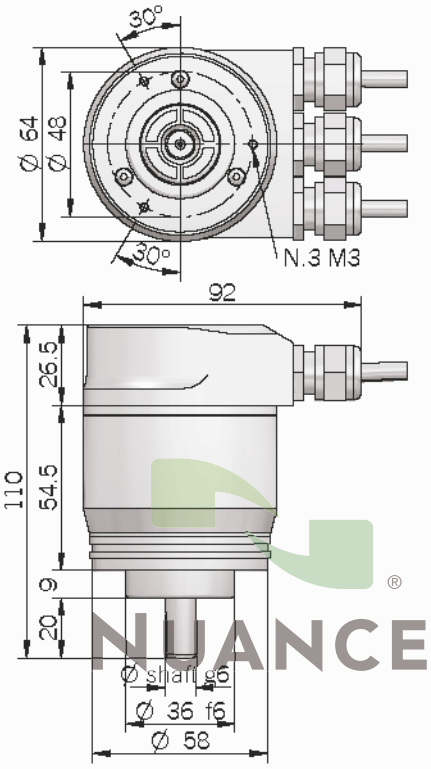

EA 63 D

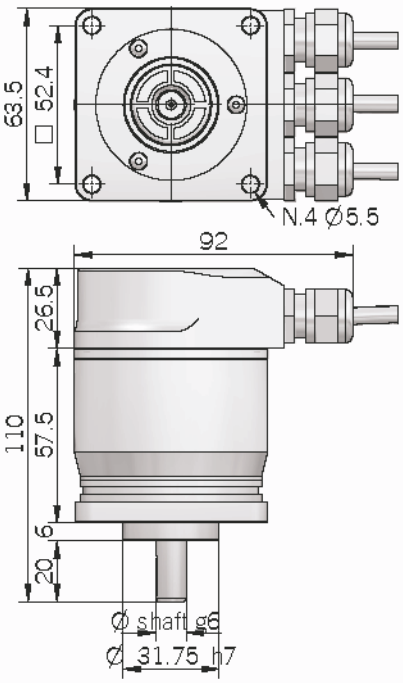

EA 63 E

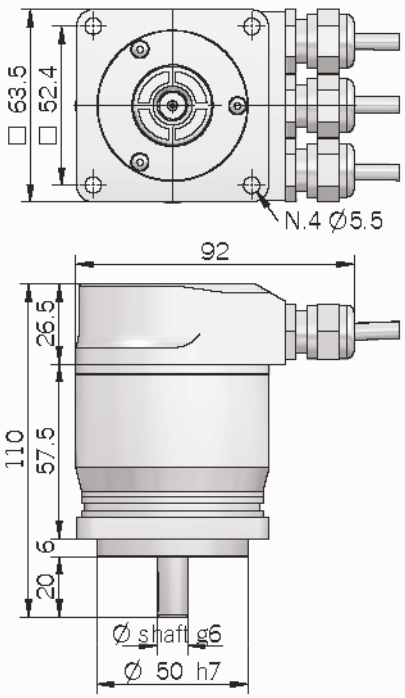

NUANCE®

EA 58 F

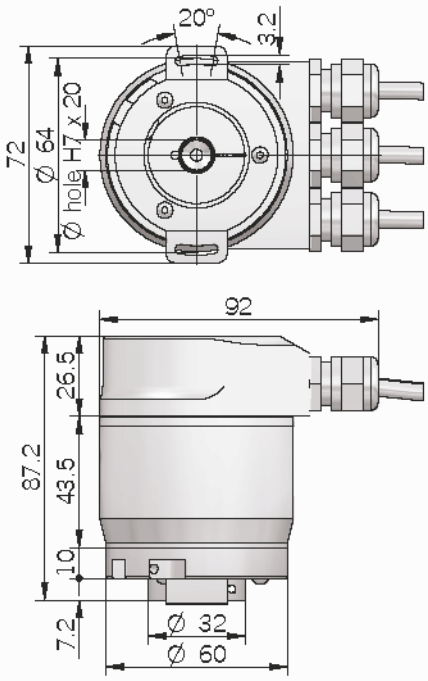

EA 63 F / G

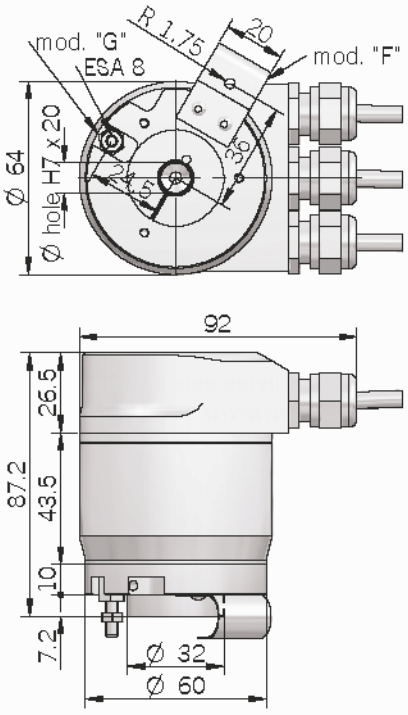

EA 90 A

* servofasteners not included

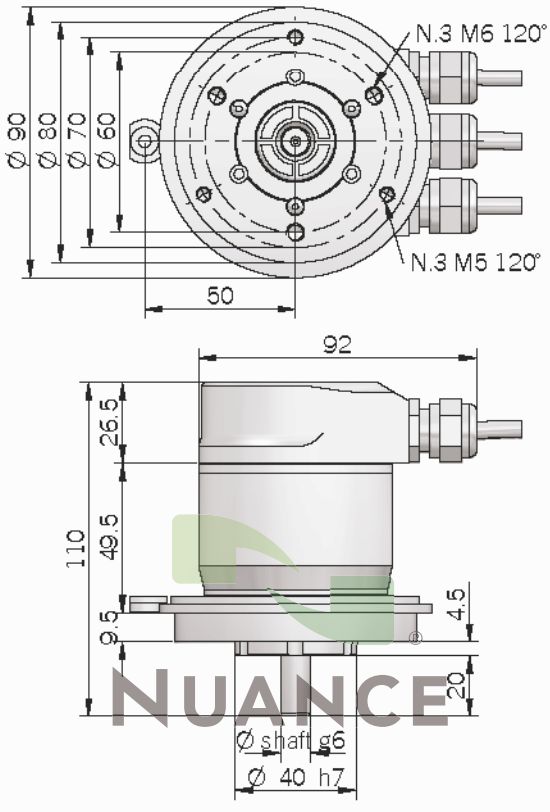

EA 115 A

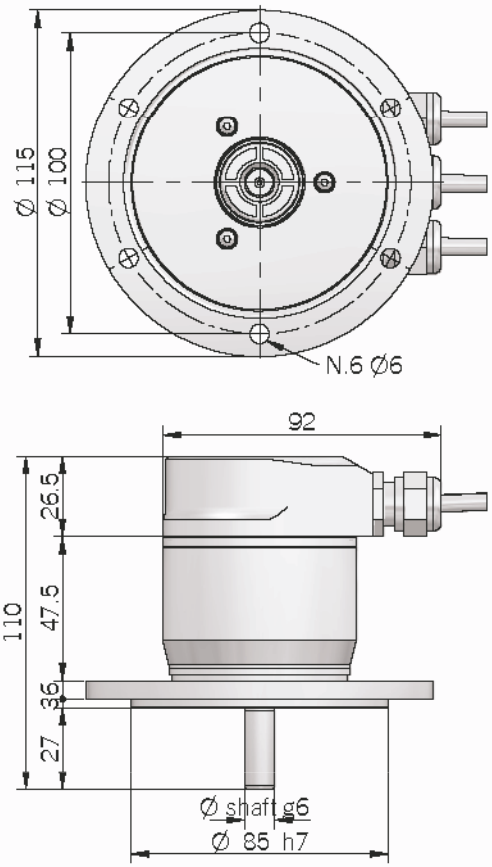

NUANCE

©Copyright 2013 Eltra S.p.a. Unipersonale. All rights reserved. All informations in this catalog are subject to change without notice.
Eltra takes no responsibility for typographic errors. For the terms of sales please check the website www.eltra.it.

Electrical specifications

Resolution	2 ... 4096 / 2 ... 8192 *programmable during commissioning*
Power supply	12 ... 28 V DC ± 5%
Current consumption without load	300 mA
Electronic interface	RS 485 galvanically isolated
Max bus frequency	12 Mbaud
Diagnostic features	frequency warning position warning / alarm *please refer to installation guide for more informations*
Response frequency	25 kHz
Accuracy	± 1/2 LSB
Counting direction	programmable during commissioning
Start-up time	500 ms
Electromagnetic compatibility	IEC 61000-6-2 IEC 61000-6-4

Mechanical specifications

Shaft diameter (mm)	6 (58B) 8 (58B - 63A/D/E - 90A) 9.52 (3/8") (63A/D/E - 90A) 10 (58B - 63A/D/E - 90A - 115A) 11 (115A) mm
Bore diameter (only for mod.58F - 63F/G)	8 / 9 (3/8") / 10 / 12 / 14 / 15 mm
Enclosure rating	IP 54 (IEC 60529) IP 66 (IEC 60529) optional for -58B/C -63A/D/E -90A
Max rotation speed	6000 rpm continuous 3000 rpm continuous for 58F - 63G 3000 rpm with IP66
Max shaft load	10 N (1 Kp) axial with ø6 shaft 20 N (2 Kp) radial with ø6 shaft 100 N (10 Kp) axial 100 N (10 Kp) radial
Shock	50 G, 11 ms (IEC 60068-2-27)
Vibrations	10 G, 10 ... 2000 Hz (IEC 60068-2-6)
Bearings life	10^9 revolutions
Bearings	n° 2 ball bearings
Shaft material	1.4305 / AISI 303 stainless steel
Body / Cover material	EN-AW 2011 aluminum
Housing material	painted aluminium
Flange material	EN-AW 2011 aluminum
Operating temperature	0° ... +60°C
Storage temperature	-15° ... +70°C
Weight	350 g - 58B/C - 63A/D/E/G 750 g - 90A - 115A
Accessories	set N° 3 fastners for models -63A -58B -90A Ord. Cod.: 94080001 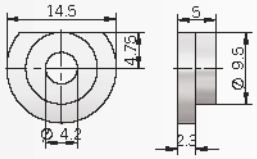

NUANCE®

EA 63 AX / DX SSI

STAINLESS STEEL
SINGLETURN ABSOLUTE ENCODERS

MAIN FEATURES

Thanks to the stainless steel enclosure, the encoder is suitable for food and beverage machinery, cranes and winches for ships, offshore applications, washing systems and all those environments where high corrosion resistance is required. EA 63 AX / DX is available with SSI output.

- Up to 13 bit
- Up tp IP 66 sealing

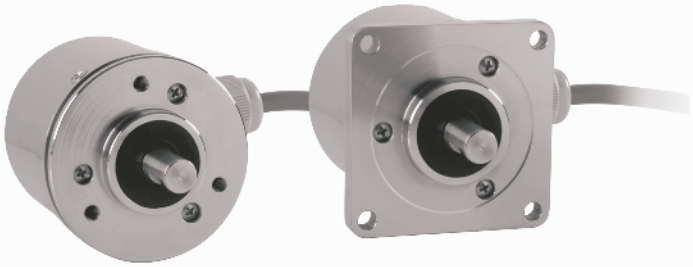

ORDERING CODE

EA 63 AX 1024 B 5 S X X 6 S 3 PC R . XXX

SERIES
singleturn absolute encoder EA

SIZE
mm 63

TYPE
synchronous flange ø 31.75 mm AX
centering square flange ø 31.75 mm DX

RESOLUTION
(powers of 2) ppr from 2 to 8192
(multiples and submultiples of 360)
ppr from 90 to 3600
(multiples and submultiples of 1000)
ppr from 250 to 4000
N.B.:please directly contact our offices for pulses availability

CODE TYPE
Binary B
Gray G

POWER SUPPLY
5 V DC 5
8 ... 28 V DC 8/28

OUTPUT TYPE
SSI S

LOGIC
X unused option

OPTION
X to be reported if not used
ZE code reset

SHAFT DIAMETER
6 mm
8 mm
9 mm (9.52 mm 3/8")
10 mm

ENCLOSURE RATING
S IP 66

MAX ROTATION SPEED
3 3000 rpm

OUTPUT TYPE
PC cable ouput (standard length 1.5 m)

OUTPUT DIRECTION
R radial

VARIANT
XXX custom version

NUANCE®

130408
© Copyright 2013 Eltra S.p.a. Unipersonale. All rights reserved. All informations in this catalog are subject to change without notice.
Eltra takes no responsibility for typographic errors. For the terms of sales please check the website www.eltra.it.

EA 63 AX

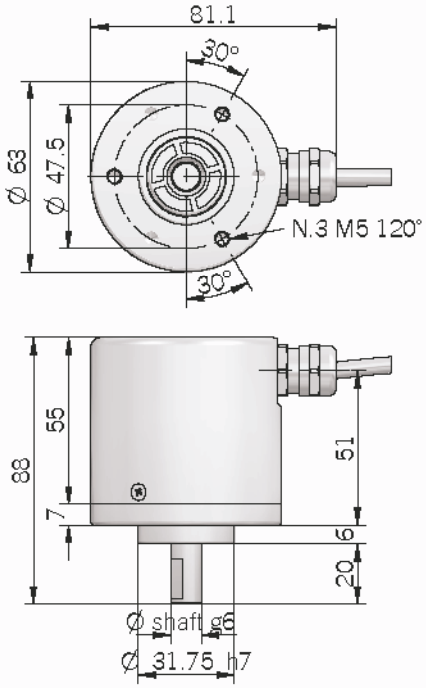

EA 63 DX

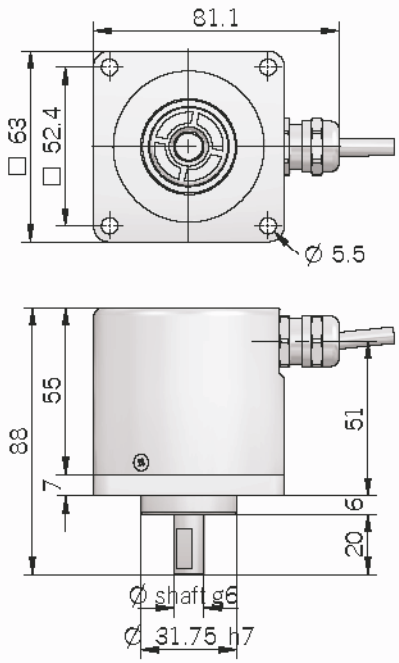

Electrical specifications

Resolution	from 2 to 8192
Power supply	5 V DC ± 10% 8 ... 28 V DC ± 5%
Current consumption without load	100 mA
Electronic interface	RS422 SSI
Auxiliary inputs (U/D - Latch - Reset)	active high (+Vdc) *connect to 0V if not used / Reset t_{min} 150 ms*
Max output frequency	100 kHz ... 1MHz SSI
SSI monostable time (Tm)	18 µs
SSI pause time (Tp)	> 35 µs
Accuracy	± 1/2 LSB
Counting direction	decreasing clockwise (shaft view)
Start-up time	150 ms
Electromagnetic compatibility	IEC 61000-6-2 IEC 61000-6-4

Mechanical specifications

Shaft diameter (mm)	6 / 8 / 9.52 (3/8") / 10
Max rotation speed	3000 rpm
Max shaft load	10 N (1 Kp) axial with ø6 shaft 20 N (2 Kp) radial with ø6 shaft 100 N (10 Kp) axial 100 N (10 Kp) radial
Shock	50 G, 11 ms (IEC 60068-2-27)
Vibrations	10 G, 10 ... 2000 Hz (IEC 60068-2-6)
Bearings life	10^9 revolutions
Bearings	n° 2 ball bearings
Shaft material	1.4305 / AISI 303 stainless steel
Body material	1.4305 / AISI 303 stainless steel
Housing material	1.4305 / AISI 303 stainless steel
Enclosure rating	IP 66 (IEC 60529)
Operating temperature	0° ... +60 °C
Storage temperature	-15° ... +70 °C
Weight	650 g

Output connections for SSI encoder

Function	Cable colours
+ Vdc	red
0 Volt	black
U/D	red-blue
data +	green
data -	brown
clock +	yellow
clock -	orange
RESET	white

NUANCE®

EA 63 AX / DX PROFIBUS

STAINLESS STEEL
SINGLETURN ABSOLUTE ENCODERS

MAIN FEATURES

Thanks to the stainless steel enclosure, the encoder is suitable for food and beverage machinery, cranes and winches for ships, offshore applications, washing systems and all those environments where high corrosion resistance is required.

- Up to 13 bit
- Up tp IP 66 sealing

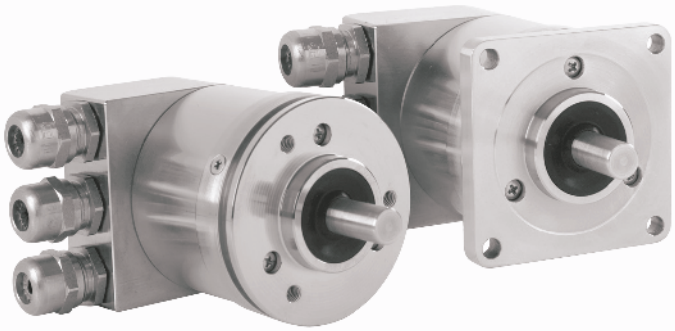

ORDERING CODE

EA 63 AX 1024 B 12/28 F X X 6 S 3 P3 R . XXX

SERIES
singleturn absolute encoder EA

SIZE
mm 63

TYPE
synchronous flange ø 31.75 mm AX
centering square flange ø 31.75 mm DX

RESOLUTION
4096 / 8192
N.B: programmable 2 ... 4096 / 2 ... 8192 during commissioning

CODE TYPE
binary B

POWER SUPPLY
12 ... 28 V DC 12/28

ELECTRONIC INTERFACE
PROFIBUS DP V0 CLASS 2 F

LOGIC
X unused option

OPTION
X unused option

SHAFT DIAMETER
6 mm
8 mm
9 mm (9.52 mm 3/8")
10 mm

ENCLOSURE RATING
S IP 66

MAX ROTATION SPEED
3 3000 rpm

OUTPUT TYPE
P3 cable glands

OUTPUT DIRECTION
R radial

VARIANT
XXX custom version

NUANCE

130409
©Copyright 2013 Eltra S.p.a. Unipersonale. All rights reserved. All informations in this catalogare subject to change without notice.
Eltra takes no responsibility for typographic errors. For the terms of sales please check the website www.eltra.it.

EA 63 AX

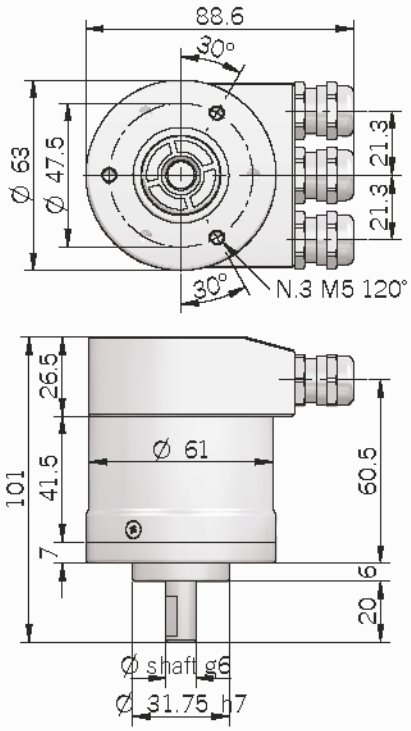

EA 63 DX

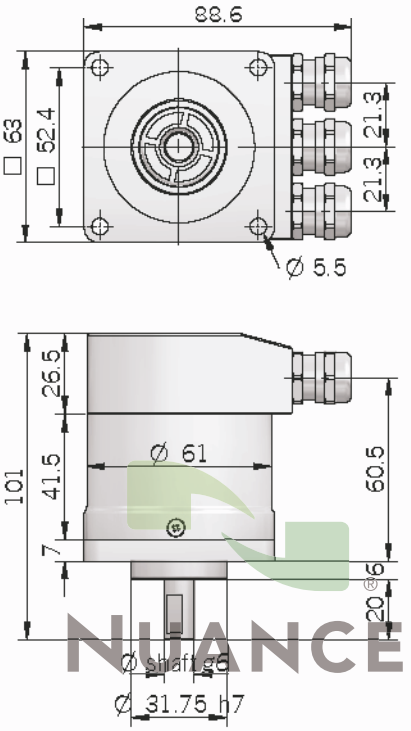

Mechanical specifications

Shaft diameter (mm)	6 / 8 / 9.52 (3/8") / 10
Enclosure rating	IP 66 (IEC 60529)
Max rotation speed	3000 rpm
Max shaft load	10 N (1 Kp) axial with ø6 shaft 20 N (2 Kp) radial with ø6 shaft 100 N (10 Kp) axial 100 N (10 Kp) radial
Shock	50 G, 11 ms (IEC 60068-2-27)
Vibrations	10 G, 10 ... 2000 Hz (IEC 60068-2-6)
Bearings life	10^9 revolutions
Bearings	n° 2 ball bearings
Shaft material	1.4305 / AISI 303 stainless steel
Body / Cover material	1.4305 / AISI 303 stainless steel
Housing material	1.4305 / AISI 303 stainless steel
Flange material	1.4305 / AISI 303 stainless steel
Operating temperature	0° ... +60°C
Storage temperature	-15° ... +70°C
Weight	900 g

Electrical specifications

Resolution	2 ... 4096 / 2 ... 8192 *programmable during commissioning*
Power supply	12 ... 28 V DC ± 5%
Current consumption without load	300 mA
Electronic interface	RS 485 galvanically isolated
Max bus frequency	12 Mbaud
Diagnostic features	frequency warning position warning / alarm *please refer to installation guide for more informations*
Response frequency	25 kHz
Accuracy	+/- 1/2 LSB
Counting direction	programmable during commissioning
Start-up time	500 ms
Electromagnetic compatibility	IEC 61000-6-2 IEC 61000-6-4

Output connections for **PROFIBUS® DP** encoder

Function	S3 connector 5-pin (power supply)	S3 connector 5-pin (line out)	S3 connector 5-pin (line in)
+ Vdc	2		
0 Volt	4		
signal A (out)		2	
signal B (out)		4	
signal A (in)			2
signal B (in)			4

NUANCE

EAX 80 A / D

SINGLETURN ABSOLUTE
FLAMEPROOF ENCODER

MAIN FEATURES

Flameproof encoders for applications within explosive and hazardous areas.

- Up to 8192 ppr (13 bit)
- Several output types available. Up to 28 V dc input voltage
- Output cable
- Several flanges available
- Up to 3000 rpm speed rotation
- IP 65 as protection grade

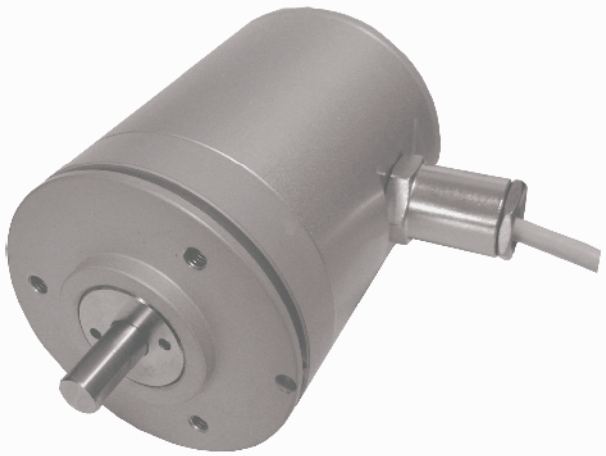

EN 60079-0:2006 / EN 60079-1:2007
EN 61241-0:2006 / EN 61241-1:2004
ATEX certificate number: CESI 04 ATEX 082

ORDERING CODE

EAX 80 A 512 G 5 N N X 10 X 3 PR . XXX

SERIES
singleturn absolute flameproof encoder EAX

SIZE
mm 80

TYPE
synchronous flange ø 40 mm A
square flange □ 65 mm D

RESOLUTION
(powers of 2) ppr from 2 to 8192
(multiples and submultiples of 360)
ppr from 90 to 3600
(multiples and submultiples of 1000)
ppr from 250 to 4000
N.B.: please directly contact our offices for pulses availability

CODE TYPE
Binary B
Gray (standard) G
Binary offset code (0-XXX) BC
Gray offset code (0-XXX) GC
powers of 2 except for the offset code

POWER SUPPLY
5 V DC 5
8 ... 28 V DC 8/28

OUTPUT TYPES
N NPN (negative logic)
C NPN OPEN COLLECTOR (negative logic)
R PNP (positive logic)
U PNP OPEN COLLECTOR (positive logic)
P PUSH PULL (with short circuit protection - positive logic)
S SSI (Serial Synchronous Interface)

LOGIC
N Negative
P Positive
X to be reported with SSI output

OPTIONS
L Latch (available only with N / C / R / U / P electronic)
S Strobe (only with binary code and N / C / R / U / P electronic)
X Unused option
ZE Code reset (available only with SSI electronic)

SHAFT DIAMETER
6 mm
8 mm
10 mm

ENCLOSURE RATING
X IP 65

MAX ROTATION SPEED
3 3000 rpm

OUTPUT TYPE
PR cable output radial
(standard length 1.5 m)

VARIANT
XXX custom version

NUANCE

©Copyright 2013 Eltra S.p.a. Unipersonale. All rights reserved. All informations in this catalog are subject to change without notice.
Eltra takes no responsibility for typographic errors. For the terms of sales please check the website www.eltra.it.

EAX 80 A

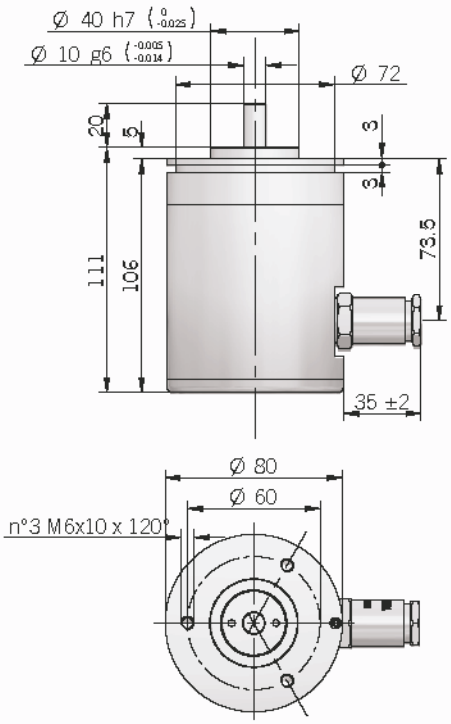

EAX 80 D

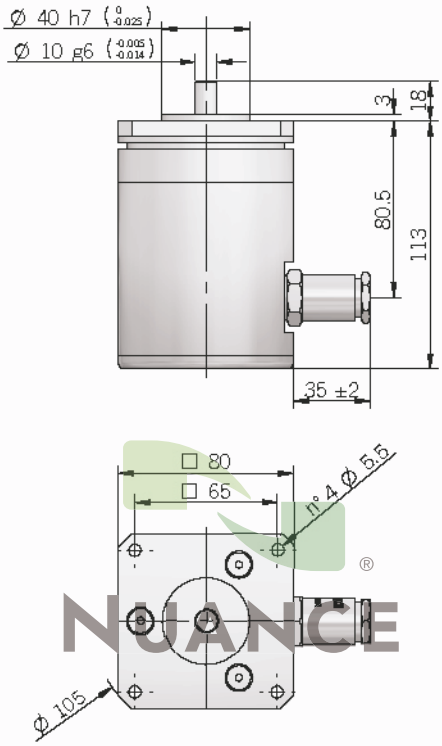

Electrical specifications

Resolution	from 2 to 8192
Power supply	5 V DC ± 10% 8 ... 28 V DC ± 5%
Current consumption without load	100 mA
Max load current	20 mA for channel (push pull) 40 mA for channel (NPN / PNP)
Electronic interface	NPN / NPN OPEN COLLECTOR / PNP / PNP OPEN COLLECTOR / PUSH PULL / RS422 SSI
Auxiliary inputs (U/D - Latch - Reset)	active high (+Vdc) *connect to 0V if not used / Reset t_{min} 150 ms*
Max output frequency	25 kHz parallel 100 kHz ÷ 1MHz SSI
SSI monostable time (Tm)	18 µs
SSI pause time (Tp)	> 35 µs
Accuracy	± 1/2 LSB
Counting direction	decreasing clockwise (shaft view)
Start-up time	< 150 ms
Electromagnetic compatibility	IEC 61000-6-2 IEC 61000-6-4

Mechanical specifications

Shaft diameter	6 / 8 / 10 mm
Enclosure rating	IP 65 (IEC 60529)
Max rotation speed	3000 rpm
Max shaft load	10 N (1 Kp) axial with ø6 shaft 20 N (2 Kp) radial with ø6 shaft 200 N (20 Kp) axial 200 N (20 Kp) radial
Shock	50 G, 11 ms (IEC 60068-2-27)
Vibrations	10 G, 10÷2000 Hz (IEC 60068-2-6)
Bearings	n° 2 ball bearings
Bearings life	10^9 revolutions
Shaft material	1.4305 / AISI 303 stainless steel
Body material	anodized aluminum
Housing material	anodized aluminum
Operating temperature	0° ... +50 °C
Storage temperature	-15° ... +70 °C
Weight	1200 g

Ⓔx II 2GD Ex d IIC T6 Ex tD A21 IP65 T85°C

Ⓔx II 2GD

II: group II: other than mines
2: category 2: zone 1 (GAS), zone 21 (DUST)
GD: gas, vapours, mist, cloud of dust

Ex d IIC T6

Ex d: flameproof enclosure safety type
IIC: gas subdivision IIC
T6: max surface temperature 85°C

Ex tD A21 IP65 T85°C

Ex tD: flameproof enclosure safety type
A: IP grade testing method
21: zone 21
IP65: protection grade IP65
T85°C: max surface temperature 85°C

130328

Output connections for SSI

Function	Wire cable
+ V dc	red
0 Volt	gray
dato +	green
dato -	brown
clk +	yellow
clk -	pink
U / D	blue
RESET	white
⏚	shield

Strobe timing

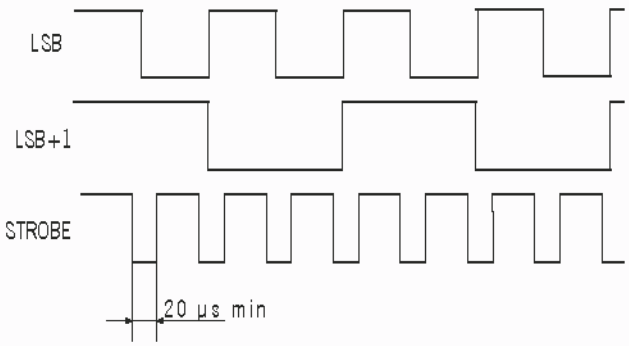

Output connections for PARALLEL

Function	B / G	Cable colours
bit 1 (LSB)	G^0 / B^0	green
bit 2	G^1 / B^1	yellow
bit 3	G^2 / B^2	blue
bit 4	G^3 / B^3	brown
bit 5	G^4 / B^4	pink
bit 6	G^5 / B^5	white
bit 7	G^6 / B^6	gray
bit 8	G^7 / B^7	violet
bit 9	G^8 / B^8	gray / pink
bit10	G^9 / B^9	white / green
bit 11	G^{10} / B^{10}	brown / green
bit 12	G^{11} / B^{11}	white / yellow
bit 13	G^{12} / B^{12}	yellow / brown
0 Volt	/	black
+ Vdc	/	red
U / D	/	red / blue
STROBE	/	white / gray
LATCH	/	brown / blue or gray / brown
⏚	/	shield

NUANCE®

130328
©Copyright 2013 Eltra S.p.a. Unipersonale. All rights reserved. All informations in this catalog are subject to change without notice.
Eltra takes no responsibility for typographic errors. For the terms of sales please check the website www.eltra.it.

EA 120 P

THROUGH HOLLOW SHAFT
SINGLETURN ABSOLUTE ENCODERS

ISO 9001:2000

MAIN FEATURES

The EA 120 is an absolute encoder with through hollow shaft suitable for textile machine, elevator motors and generally all the applications where big diameter shaft is required.

- Up to 13 bit
- Through hollow shaft from 30 to 50.8 mm (2")

ORDERING CODE

EA 120 P 2048 B 5 S X X 50 X 3 PCR . XXX

SERIES
singleturn absolute encoder EA

SIZE
mm 120

TYPE
through hollow shaft with spring and front fixing P

RESOLUTION
(powers of 2) ppr from 2 to 8192
(multiples and submultiples of 360) ppr from 90 to 3600
(multiples and submultiples of 1000) ppr from 250 to 4000
N.B.:please directly contact our offices for pulses availability

CODE
Binary B
Gray G

POWER SUPPLY
5 V DC 5
8 ... 28 V DC 8/28

OUTPUT TYPE
SSI S

LOGIC
X unused option

OPTION
X unused option
ZE code reset

SHAFT DIAMETER
30 mm
40 mm
50 mm
50.8 mm (2")

ENCLOSURE RATING
X IP 54

MAX ROTATION SPEED
3 3000 rpm

OUTPUT TYPE
PCR radial cable ouput with cable gland (standard length 0.5 m) (12-core)
HAR radial H connector output (12-pin)
MCR radial M connector output (7-pin)
M12R radial M12 connector output (8-pin)

VARIANT
XXX custom version

NUANCE

EA 120 P

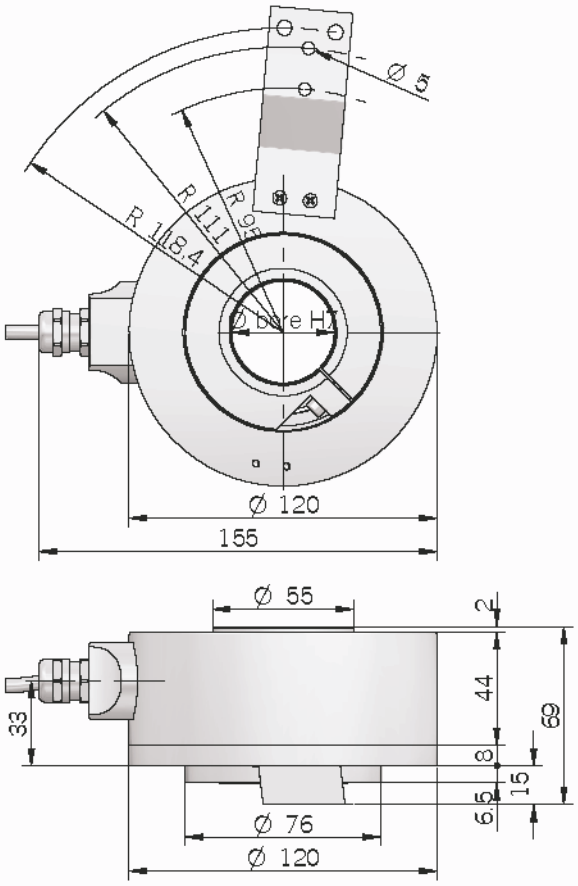

Electrical specifications

Resolution	up to 8192 ppr
Power supply	5 V DC ± 10% 8 ... 28 V DC ± 5%
Current consumption without load	200 mA max
Max load current	20 mA for channel
Electronic interface	RS422 SSI
Auxiliary inputs (U/D - Reset)	active high (+Vdc) *connect to 0V if not used / Reset t_{min} 150 ms*
Max output frequency	1 MHz SSI
Monostable time (SSI)	16 µs
Accuracy	± 1/2 LSB
Counting direction	decreasing clockwise (shaft view)
Start-up time	150 ms
Electromagnetic compatibility	IEC 61000-6-2 IEC 61000-6-4

Mechanical specifications

Shaft diameter	30 / 40 / 50 / 50.8 (2") mm
Enclosure rating	IP 54
Max rotation speed	3000 rpm
Shock	50 G, 11 ms (IEC 60068-2-27)
Vibrations	10 G, 10÷2000 Hz (IEC 60068-2-6)
Bearings	n° 2 ball bearings
Bearings life	10^9 revolutions
Body material	EN-AW 2011 aluminum
Shaft material	1.4305 / AISI 303 stainless steel
Housing material	EN-AW 2011 aluminum
Operating temperature	0° ... +60 °C
Storage temperature	-15° ... +70 °C
Weight	1000 g

Output connections for SSI encoder

Funzione	12 wire cable colours	Pin "M07MP"	Pin "M12MP"	Pin "H12"
+ Vdc	red	G	8	8
0 Volt	black	F	5	1
U / D	red-blue	E	7	5
data +	green	C	3	2
data -	brown	D	2	10
clock +	yellow	A	4	3
clock -	orange	B	6	11
RESET	white	/	1	4

NUANCE®

©Copyright 2013 Eltra S.p.a. Unipersonale. All rights reserved. All informations in this catalog are subject to change without notice.
Eltra takes no responsibility for typographic errors. For the terms of sales please check the website www.eltra.it.

EAM
PARALLEL - SSI
MULTITURN ABSOLUTE
ENCODER

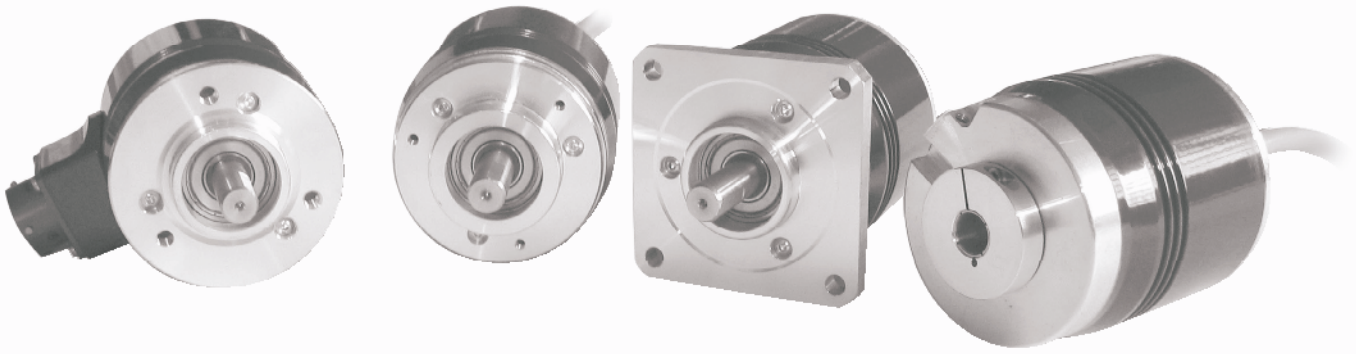

ABSOLUTE MULTITURN PARALLEL ENCODER DESCRIPTION

This series is designed for application where a very high precision is required, even also on extended linear distances. Resolutions up to 13 bits on the single turn (8192 ppr) and 12 bits as number of turns (4096 turns) are available. Sturdy mechanic parts and several flanges make this series suitable in such a wide range of applications assuring high performances even in the most tough industrial applications. This series is available with cable or connector output both with Gray or binary code. The PUSH PULL electronic is suitable for all industrial application fields.

ABSOLUTE SINGLETURN SSI ENCODER DESCRIPTION

The absolute multiturn encoder series with SSI output provides data with the same format as previously described for singleturn encoders.
Considering the high data volume in multiturn encoders, the serial data transfer is an efficient solution in order to curb the number of wires and the SSI standard is a valuable one.
The output data is a 25 bit word and useful bits are proportional to the resolution chosen for the encoder.
This transmission standard efficiently reduces wiring issues maintaining the highest level of performances. Similary to singleturn encoders, number of wires for the transmission is 4 (2 for the data and 2 for the clock signal both are transmitted in differential logic). A wide range of mechanical parts and flanges designed to satisfy different requirements is available.

NUANCE®

PARALLEL ENCODER ORDERING CODE

EAM 63 A R 4096 / 4096 G 8/28 P P X 10 X 3 MA R . XXX

SERIES
absolute multiturn encoder EAM

SIZE
mm 58
mm 63
mm 90
mm 115

TYPE
synchronous flange ø 31.75 mm (EAM63) A
synchronous flange ø 40 mm (EAM90) A
RE0444 flange (EAM115) A
synchronous flange ø 50 mm (EAM58) B
fixing flange ø 36 mm (EAM58) C
centering square flange ø 31.75 mm (EAM63) D
centering square flange ø 50 mm (EAM63) E
blind hollow shaft with spring (EAM58 / 63) F
blind hollow shaft with anti-rotation pin (EAM63) G
rev. 2.0 (compact version) R

MULTITURN RESOLUTION
2 / 4 / 8 / 16 / 32 / 64 / 128 / 256 / 512 / 1024 / 2048 / 4096 / 8192 / 16384

SINGLETURN RESOLUTION
2 / 4 / 8 / 16 / 32 / 64 / 128 / 256 / 512 / 1024 / 2048 / 4096 / 8192
N.B: please directly contact our offices for pulses availability

CODE TYPE
Binary B
Gray (standard) G

POWER SUPPLY
8 ... 28 V DC 8/28

ELECTRONIC INTERFACE
PUSH PULL with short circuit protection (positive logic standard) P

LOGIC
N negative
P positive

OPTIONS
L Latch
X to be reported if not used

SHAFT DIAMETER
6 mm - 58B
8 mm - 58B - 63A/D/E - 90A
9 mm (9.52 mm 3/8") - 63A/D/E - 90A
10 mm - 58B/C - 63A/D/E - 90A - 115A
11 mm - 115A

BORE DIAMETER ONLY FOR MOD. 58F - 63F/G
8 mm
9 mm (9.52 mm 3/8")
10 mm
12 mm
14 mm
15 mm

ENCLOSURE RATING
X IP 54
S optional IP 66 with the exception EAM 58F - 63F/G - 115A

MAX ROTATION SPEED
3 3000 rpm with IP 66
6 6000 rpm

OUTPUT TYPE
PD cable output 16 poles (standard length 1.5m)
PE cable output 32 poles (standard length 1.5m)
MA 19 poles MS type connector
ME 32 poles MS type connector

OUTPUT DIRECTION
A axial
R radial

VARIANT
XXX custom version

NUANCE®

© Copyright 2013 Eltra S.p.a. Unipersonale. All rights reserved. All informations in this catalog are subject to change without notice.
Eltra takes no responsibility for typographic errors. For the terms of sales please check the website www.eltra.it.

Connections and colours for **PARALLEL** models					
Function	**B / G**	**16 wire cable colours**	**32 wire cable colours**	**Pin M19MP**	**Pin M32MP**
bit 1 (LSB)	B^0 / G^0	green	green	A	A
bit 2	B^1 / G^1	yellow	yellow	B	B
bit 3	B^2 / G^2	blue	blue	C	C
bit 4	B^3 / G^3	brown	brown	D	D
bit 5	B^4 / G^4	pink or orange	pink or orange	E	E
bit 6	B^5 / G^5	white	white	F	F
bit 7	B^6 / G^6	gray	gray	G	G
bit 8	B^7 / G^7	violet	violet	H	H
bit 9	B^8 / G^8	gray/pink	gray/pink	J	J
bit 10	B^9 / G^9	white/green	white/green	K	K
bit 11	B^{10} / G^{10}	brown/green	brown/green	L	L
bit 12	B^{11} / G^{11}	white/yellow	white/yellow	M	M
bit 13	B^{12} / G^{12}	yellow/brown	yellow/brown	N	N
bit 14	B^{13} / G^{13}	/	white/gray	P	P
bit 15	B^{14} / G^{14}	/	gray/brown	R	R
bit 16	B^{15} / G^{15}	/	white/pink	S	S
bit 17	B^{16} / G^{16}	/	pink/brown	/	T
bit 18	B^{17} / G^{17}	/	white/blue	/	U
bit 19	B^{18} / G^{18}	/	brown/blue	/	V
bit 20	B^{19} / G^{19}	/	white/red	/	W
bit 21	B^{20} / G^{20}	/	brown/red	/	X
bit 22	B^{21} / G^{21}	/	white/black	/	Y
bit 23	B^{22} / G^{22}	/	brown/black	/	Z
bit 24	B^{23} / G^{23}	/	gray/green	/	a
bit 25	B^{24} / G^{24}	/	yellow/pink	/	d
bit 26	B^{25} / G^{25}	/	yellow/blue	/	c
bit 27	B^{26} / G^{26}	/	green/blue	/	b
LATCH	/	yellow/gray	yellow/gray	/	e
0 Volt	/	black	black	T	j
U / D	/	red/blue	red/blue	U	g
+ Vdc	/	red	red	V	h

CONNECTOR OR CABLE CHOICE

According to the resolution and the chosen number of turns is possible to calculate the connections required by the connector or the cable. From the below table is possible to know the connection number.

EXAMPLE 1:
256 PPR = 8 connections
N° turns 32 = 5 connections
Total connections 13.

EXAMPLE 2:
4096 PPR = 12 connections
N° turns 4096 = 12 connections
Total connections 24.

From 1 to 13 connections a 16 poles cable or a 19 poles connector have to be considered.

From 14 to 27 connections a 32 poles cable or a 32 poles connector have to be considered.

If optional signals are used a cable or a 32 poles connector is suggested.

Output connections for SSI			
Function	**Cable colours**	**Pin M07MP**	**Pin H12**
+ Vdc	red	G	8
0 Volt	black	F	1
U / D	red/blue	E	5
Data +	green	C	2
Data -	brown	D	10
Clock +	yellow	A	3
Clock -	orange	B	11

NUANCE®

SSI ENCODER ORDERING CODE

EAM 63 A R 4096 / 4096 G 5 S X X 10 X 3 MC R . XXX

SERIES
absolute multiturn encoder EAM

SIZE
mm 58
mm 63
mm 90
mm 115

TYPE
synchronous flange ø 31.75 mm (EAM63) A
synchronous flange ø 40 mm (EAM90) A
RE0444 flange (EAM115) A
synchronous flange ø 50 mm (EAM58) B
fixing flange ø 36 mm (EAM58) C
centering square flange ø 31.75 mm (EAM63) D
centering square flange ø 50 mm (EAM63) E
blind hollow shaft with spring (EAM58 / 63) F
blind hollow shaft with anti-rotation pin (EAM63) G
rev. 2.0 (compact version) R

MULTITURN RESOLUTION
2 / 4 / 8 / 16 / 32 / 64 / 128 / 256 / 512 / 1024 / 2048 / 4096 / 8192 / 16384

SINGLETURN RESOLUTION
2 / 4 / 8 / 16 / 32 / 64 / 128 / 256 / 512 / 1024 / 2048 / 4096 / 8192
N.B. please directly contact our offices for pulses availability

CODE TYPE
Binary B
Gray (standard) G

POWER SUPPLY
5 V DC 5
8 ... 28 V DC 8/28

ELECTRONIC INTERFACE
SSI (Serial Synchronous Interface) S

LOGIC
X to be reported if not used

OPTIONS
X to be reported if not used

SHAFT DIAMETER
6 mm - 58B
8 mm - 58B - 63A/D/E - 90A
9 mm (9.52 mm 3/8") - 63A/D/E - 90A
10 mm - 58B/C - 63A/D/E - 90A - 115A
11 mm - 115A

BORE DIAMETER ONLY FOR MOD. 58F - 63F/G
8 mm
9 mm (9.52 mm 3/8")
10 mm
12 mm
14 mm
15 mm

ENCLOSURE RATING
X IP 54
S optional IP 66 with the exception EAM 58F - 63F/G - 115A

MAX ROTATION SPEED
3 3000 rpm with IP 66
6 6000 rpm

OUTPUT TYPE
PC cable output 12 poles (standard length 1.5m)
MC MS type 7 poles connector
HA H type 12 poles connector

OUTPUT DIRECTION
A axial
R radial

VARIANT
XXX custom version

NUANCE®

130409
© Copyright 2013 Eltra S.p.a. Unipersonale. All rights reserved. All informations in this catalogare subject to change without notice.
Eltra takes no responsibility for typographic errors. For the terms of sales please check the website www.eltra.it.

EAM 63 AR

* servofasteners not included

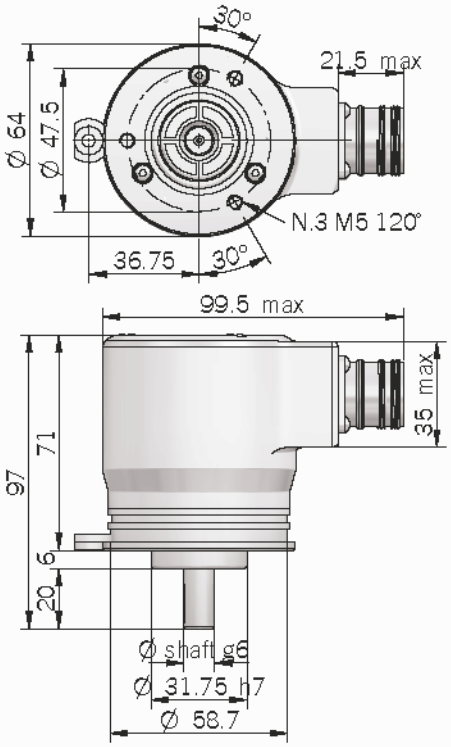

EAM 58 BR

* servofasteners not included

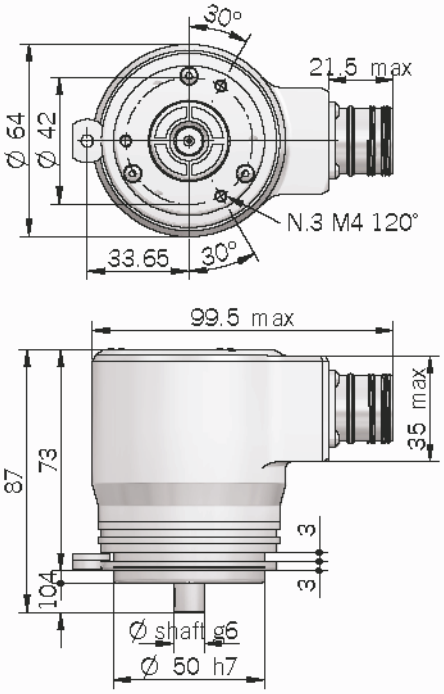

EAM 58 CR

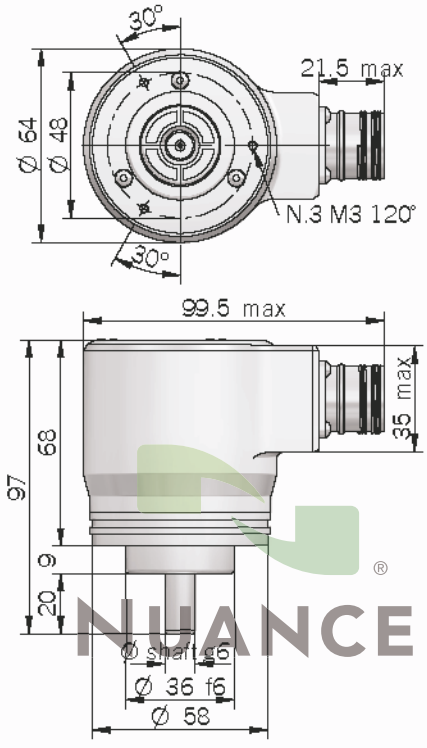
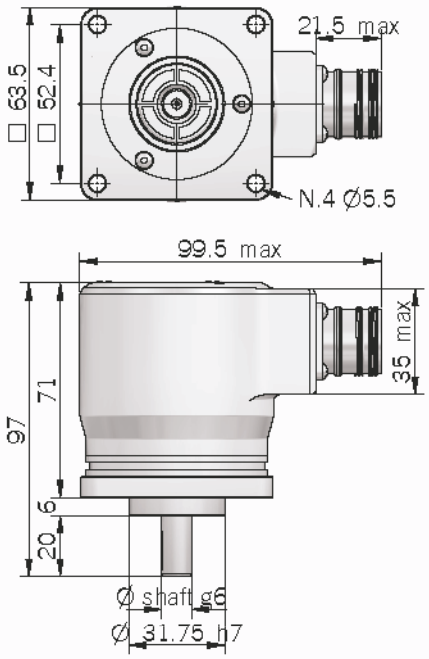
EAM 63 DR